Power Supplies

TD365
365 Day Timer

RUTHERFORD CONTROLS

In or Out... we make it Easy!®

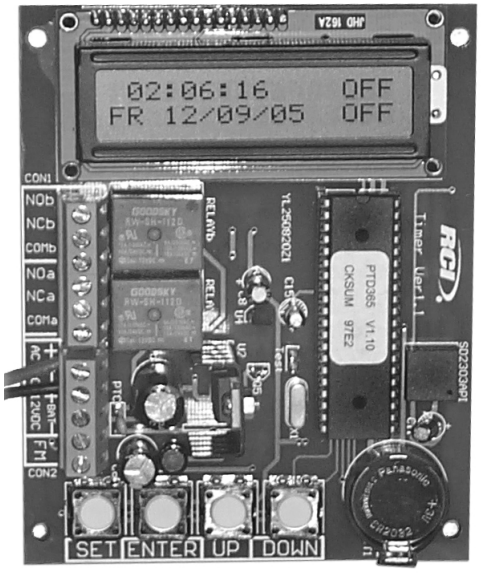

Lithium Battery INCLUDED

TD365
3-3/4"W x 4-11/16"H x 1"D
(95mm x 120mm x 25mm)

Features & Benefits

- 24 hr, 365 day timer for individual daily events
- 2 momentary or latching form "C" relays to control locks and other electronic devices or circuits
- Large alphanumeric backlit LCD display for easy programming
- 16 characters by 2 line LCD
- "First Person In" feature to prevent unattended open doors
- EEProm memory for safe storage of data (all data is stored in the event of a power failure)
- 40 programmable holidays to override regular schedule
- 99 daily/weekly events for flexibility and versatility
- Automatic voltage selection 12 to 24 VAC or DC
- Built in battery charger circuit allows for addition of stand by battery
- High current capabilities

365 Day Timer

RCI's TD365 is a fully programmable, 365 day/24 hour, multiple event timer. It is extremely versatile and may be used for a wide variety of applications. The timer can perform up to 99 daily/weekly independent events. Each of these events may be programmed to occur at any time, or day of the week. Daylight Savings time is no problem, simply select the Daylight Savings mode and automatic adjustment will occur.

The "First Person In" feature is designed to delay the automatic disarming of a security system until the first person with authorized access arrives at the protected premises. If nobody arrives, as in the event of holidays or severe weather conditions, the security system (burglar alarms, access controls, video cameras, etc.) will remain armed.

The TD365 Timer includes a variety of features to meet all of your demanding home/building automation requirements.

Highlights

- The "First Person In" feature ensures that your front door will not unlock for the day until the first person arrives (very useful on severe weather days)
- Easy installation and programming
- Batch events can be created to eliminate repetitive daily event programming
- True 24 hr / 365 day functionality

Applications

- Retail Outlets
- Industrial Buildings
- Commercial Centers
- Heath Care Facilities
- Home and Building Automation
- Government

©2011 RUTHERFORD CONTROLS INT'L CORP. WWW.RUTHERFORDCONTROLS.COM
USA: 2517 SQUADRON COURT, SUITE 104, VIRGINIA BEACH, VA 23453 • CANADA: 210 SHEARSON CRESCENT, CAMBRIDGE, ON N1T 1J6
PHONE • 1.800.265.6630 • 519.621.7651 • FAX: 1.800.482.9795 • 519.621.7939 • E-MAIL: SALES@RUTHERFORDCONTROLS.COM

Specifications

TD365

RUTHERFORD CONTROLS

In or Out... we make it Easy!®

NOTE: Not to scale. Specifications are subject to change without notice.

Specifications				
Dimensions	**Input Voltage**	**Relay Rating**	**Current Draw**	**# of events**
3-3/4"W x 4-11/16"H x 1"D (95mm x 120mm x 25mm)	12 to 24VDC or VAC	5A@240VAC 12A@120VAC 10A@12/24VDC	50-160 ma @ 12VDC 50-120 ma @ 24VDC 40-110 ma @ 12/24VAC	99 User Events 40 Holiday Events 1 Block Event

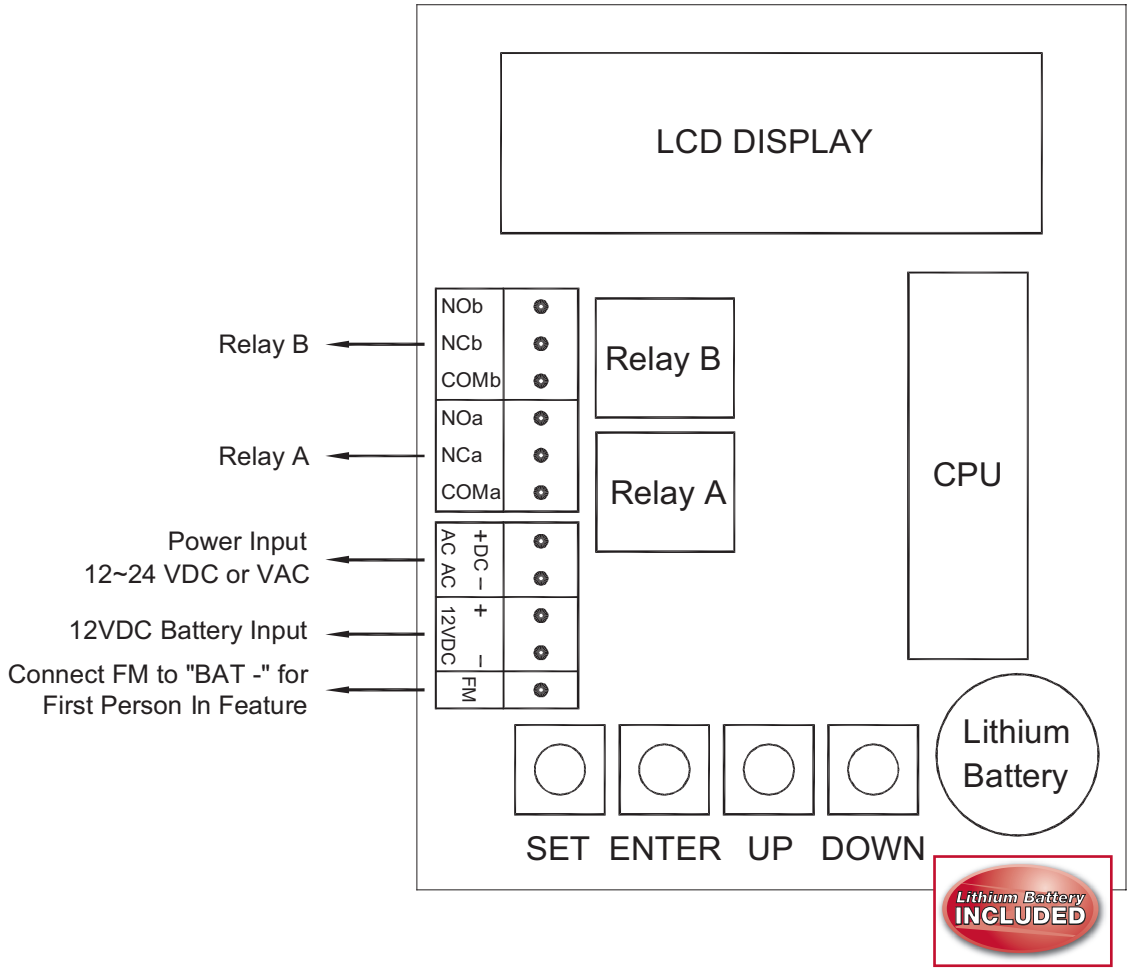

©2011 RUTHERFORD CONTROLS INT'L CORP. WWW.RUTHERFORDCONTROLS.COM
USA: 2517 SQUADRON COURT, SUITE 104, VIRGINIA BEACH, VA 23453 • CANADA: 210 SHEARSON CRESCENT, CAMBRIDGE, ON N1T 1J6
PHONE • 1.800.265.6630 • 519.621.7651 • FAX: 1.800.482.9795 • 519.621.7939 • E-MAIL: SALES@RUTHERFORDCONTROLS.COM