RCI™
RUTHERFORD CONTROLS
A DORMA Group Company

In or Out... we make it Easy!®



Dimensions
6.875"W x 1.875"H x 2"D
(174.63mm x 47.63mm x 51mm)

Features & Benefits

- Mounts on or above the door frame with infrared beam directed near door hardware
- Infrared beam is targeted directly near door hardware for pinpoint accuracy and operation, preventing circumvented entry by sliding objects under the door
- Multiple relocking modes for any timed or door position conditions
- Relay output consists of two Form "C" contacts for NO/NC wiring
- Integrated local sounder with adjustable volume and activation LEDs
- 3 additional auxiliary inputs: request to exit, card reader and a door position switch
- 12 to 24 VDC/AC

Active Focused Infrared

The 915AFI is an active infrared, request-to-exit detector specifically designed for access control applications where maximum protection is required.

Highlights

- Active Infrared Technology
- UL 294/ULC S319 Certified
- Built-In Sounder
- Fully adjustable sounder volume and activation LEDs
- 3 year warranty

Finishes

915AFIB . . . . . Black
915AFIW. . . . . White

Certifications

c UL us

©2013 RUTHERFORD CONTROLS • WWW.RUTHERFORDCONTROLS.COM
USA: 2517 SQUADRON COURT, SUITE 104, VIRGINIA BEACH, VA 23453 • CANADA: 210 SHEARSON CRESCENT, CAMBRIDGE, ON N1T 1J6
PHONE • 1.800.265.6630 • 519.621.7651 • FAX: 1.800.482.9795 • 519.621.7939 • E-MAIL: SALES@RUTHERFORDCONTROLS.COM

RUTHERFORD CONTROLS
A DORMA Group Company

In or Out... we make it Easy!®

Technical Specifications

Detector Type	Active Focused Infrared	DRY Exit Input	Normally-Opened (I/O via DIP)
Supply Voltage	12 – 24V AC/DC: ±10%, 60 Hz	DRY Card Reader Input	Normally-Closed (I/O via DIP)
Current	155 mA (sounder off)/ 200 mA (sounder max.)	DRY DPS Input	Normally-Opened (I/O via DIP)
Temperature	–20°F – +120°F –29°C – +49°C	Detection Range	Adjustable, 20″ – 48″
UL Temperature	+32°F – +120°F 0°C – +49°C	Dimensions (L x W x H)	6.875″ x 2.0″ x 1.875″ 174.63mm x 51mm x 47.63mm
Humidity (non-condensing)	0% – 93% 0% – 85% (UL Listed install)	Material	Plastic (ABS & PC)
Relay	2 Form "C" contact sets; 1.3A @ 24V AC, 30V DC	Wiring Interface	JST (14 Pin) with 4′ Cable
Hold Time	0.5 – 60 seconds	Certification	UL 294 / ULC S319, FCC Part B

Detail

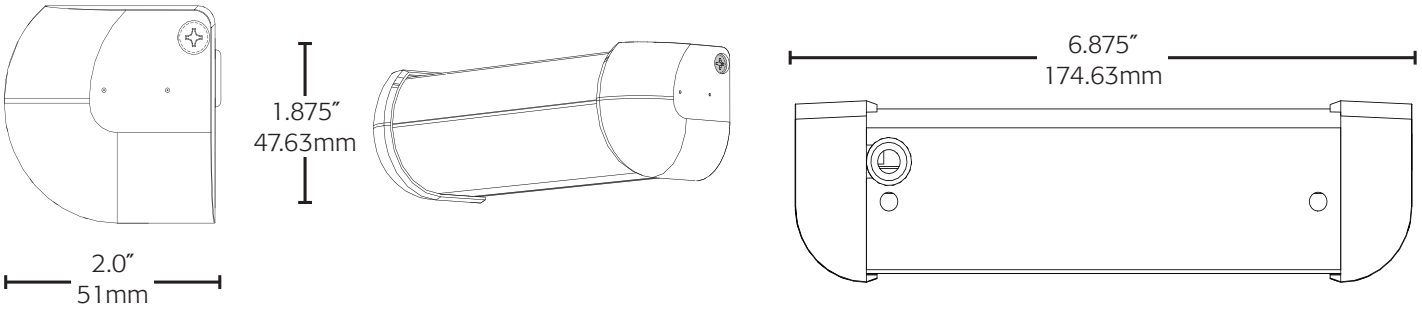

Single Door Mounting Positions



Front View | Side View | Perspective View

RCI also offers a complete line of Electromagnetic Locks, Electric Strikes, Power Supplies, Switches, Keypads & Readers, Exit Devices, Systems & Door Hardware.

©2013 RUTHERFORD CONTROLS • WWW.RUTHERFORDCONTROLS.COM
USA: 2517 SQUADRON COURT, SUITE 104, VIRGINIA BEACH, VA 23453 • CANADA: 210 SHEARSON CRESCENT, CAMBRIDGE, ON N1T 1J6
PHONE • 1.800.265.6630 • 519.621.7651 • FAX: 1.800.482.9795 • 519.621.7939 • E-MAIL: SALES@RUTHERFORDCONTROLS.COM