Electromagnetic Locks

8380

8 Series GateMag®

RUTHERFORD CONTROLS
A DORMA Group Company

In or Out…we make it Easy!®



Single or double swinging gates and exterior or interior sliding gates
1-3/4"D x 2-1/2"W x 8-7/8"L
(45 x 63 x 225mm)

c UL us LISTED

Features & Benefits

- Stainless steel housing
- Low energy consumption
- Field selectable voltage – 12/24VDC
- MOV surge protection
- 6-1/2' (1.9 meters) wire cable
- Conduit fitting inside diameter 1/2"
- Conduit fitting outside diameter 3/4"
- No residual magnetism
- Built-in Remote Lock Status (RLS)
- Weather-resistant
- Versatile face or bottom mounting
- Throughbolt mounting
- Up to 1500lbf (680kgf) holding force
- UL Listed Auxilliary Lock for use on fire doors rated up to 1.5

Optional Mounting Accessories

- Top Jamb 'Z' Bracket
- Post Bracket
- Hardware Kits

GateMag®

With its rugged, stainless-steel housing, the weather-resistant GateMag® is the ideal solution for perimeter security and internal gates. The standard Remote Lock Status (RLS) indicates whether the magnet is locked or unlocked, so you can easily monitor access from a remote location.

The GateMag® electromagnetic lock features a built-in conduit fitting and an extra-long wire cable allowing easy wire access to an electrical box.

Highlights

- Weather-resistant
- Face or bottom mounting
- Up to 1500 lbf. holding force
- Dual voltage
- cULus Listed
- CSFM Listed
- Lifetime Warranty

Applications

EXTERIOR OR INTERIOR

- Sliding gates
- Swinging gates
- Tool cages
- Fences
- Storage areas

©2014 RUTHERFORD CONTROLS INT'L CORP. WWW.RUTHERFORDCONTROLS.COM
USA: 2517 SQUADRON COURT, SUITE 104, VIRGINIA BEACH, VA 23453 • CANADA: 210 SHEARSON CRESCENT, CAMBRIDGE, ON N1T 1J6
PHONE • 1.800.265.6630 • 519.621.7651 • FAX: 1.800.482.9795 • 519.621.7939• E-MAIL: SALES@RUTHERFORDCONTROLS.COM

PCN13057
R02/14MM

Specifications 8380

RUTHERFORD CONTROLS
A DORMA Group Company

In or Out...we make it Easy!®

NOTE: Specifications are subject to change without notice.

Specifications	8380	
Housing Dimensions	1-3/4" D x 2-1/2" W x 8-7/8" L (45mm x 63mm x 225mm)	
Armature Plate Dimensions	5/8" D x 2-3/8" W x 7-7/16" L (16mm x 61mm x 190mm)	
Voltage	Field selectable 12/24 VDC	Tolerance ±10%
Power/Current Requirements	Max 0.48A at 12 VDC	Max 0.24A at 24 VDC
Holding Force		Up to 1500 lbs.
Output Contacts	Remote Lock Status (RLS) reed contacts are rated at Max 0.20A @ 12VDC 0.12A @ 24VDC	
Wiring Requirements	2 wires – power input	2 wires – contact output
Operating Temperature	-10 to 60° C	14 to 140° F
Certification		cULus, CSFM

NOTE: RCI recommends frame reinforcement and our filtered, regulated DC voltage 10 Series power supplies.

Function Descriptions	
Remote Lock Status (RLS)	A FORM C reed switch offers lock status remote indication capability.

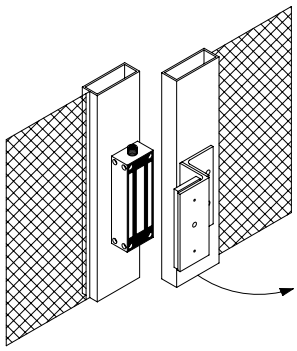

Single Swing Gate Installation

Note: For proper operation one side of the double gate pair should be stationary. Lock may not hold correctly if both gates swing freely

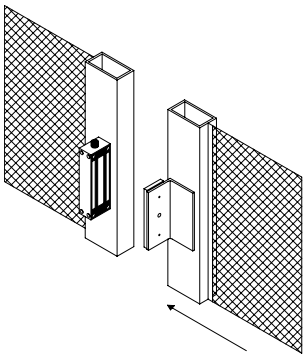

Sliding Gate Installation

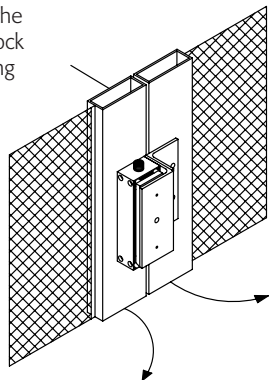

Double Swing Gate Installation

RCI also offers a complete line of Electromagnetic Locks, Electric Strikes, Electric Locks Power Supplies, Switches, Keypads & Readers, Exit Devices, Systems & Door Hardware.

©2014 RUTHERFORD CONTROLS • WWW.RUTHERFORDCONTROLS.COM
USA: 2517 SQUADRON COURT, SUITE 104, VIRGINIA BEACH, VA 23453 • CANADA: 210 SHEARSON CRESCENT, CAMBRIDGE, ON N1T 1J6
PHONE • 1.800.265.6630 • 519.621.7651 • FAX: 1.800.482.9795 • 519.621.7939• E-MAIL: SALES@RUTHERFORDCONTROLS.COM