Electric Strikes

4 Series

4 Series
Centerline Latch Entry

RUTHERFORD CONTROLS
A DORMA Group Company

In or Out…we make it Easy!®



Features & Benefits

- Accommodates 3/4" latch projection
- Enlarged latch cavity width allows compatibility with cylindrical, narrowline aluminum and centerline mortise locks (including 3-piece anti-friction type) and mortise exit devices
- Unique anti-vibration design prevents manipulation by vibration
- 1-1/2" cut-out depth accommodates most aluminum and wood frame profiles
- Use with wide range of door thicknesses (1-3/8" to 2-3/8")
- AC/DC input acceptable for fail locked models. Fail unlocked mode requires DC
- Non-Handed
- Standard mounting tabs, fasteners, and trim plate included

Applications

- Commercial Centers
- Industrial Buildings
- Educational Facilities
- Retail Outlets
- Health Care Facilities
- Office Complexes

4 Series

RCI's 4 Series electric strikes have earned their reputation as durable, reliable and economical means of controlling access.

Unique anti-vibration design prevents manipulation by vibration.

Crossed wires are never a problem, as the coil is non polarity-conscious.

Accessories

BXES2 . . . . . Weldable box for 4104/4304 and 4114/4314
4/7JIG. . . . . 4 series ANSI-sized jig
LEK . . . . . Lip extension kit for retrofit (specify 1", 2" or 3")
MSK11 . . . . . 1/8" mounting spacer for added latch depth (up to 7/8")
SMT-01. . . . . Strike Marking Template Kit
930-LG . . . . . Standard Profile Latch Guard
47HK9 . . . . . Standard Strike mounting hardware kit
TP47-5PK. . . 4/7 Series Trim Plate - 5 pk (Not Available for 4119, 4319, and F4 Models)

Options

3, 4, 10, 10B, 32 Special Finishes

Highlights

- UL 1034 burglary-resistant Listed
- UL Listed for 1000 lbs of static strength*
- Non-handed
- Modular design
- Stainless steel faceplate (standard finish 32D)
- 3-year limited warranty

* Tested on 04, and 14 faceplates only

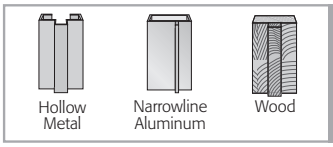

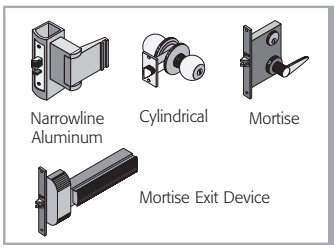

Specifications

4114, 4104, 4105
4314, 4304, 4305

RUTHERFORD CONTROLS
A DORMA Group Company

In or Out...we make it Easy!®







4114/4314
1-1/4"W x 4-7/8"H ANSI
(31.75 x 123.83mm)
Hollow Metal

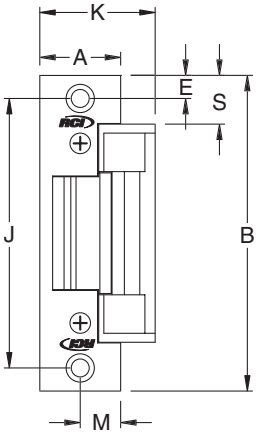

4104/4304
1-1/4"W x 4-7/8"H ANSI
(31.75 x 123.83mm)
Aluminum

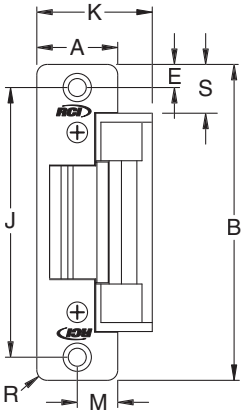

4105/4305
1-1/8"W x 5-7/8"H ANSI
(28.58 x 149.23mm)
Aluminum or Wood

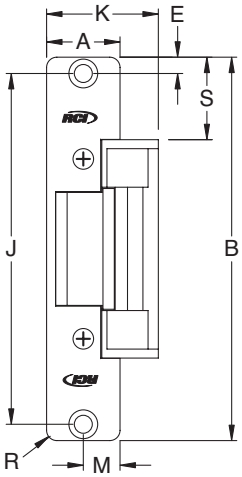

PROFILE MEASUREMENT	41/4314			41/4304			41/4305		
	Imperial (in)		Metric (mm)	Imperial (in)		Metric (mm)	Imperial (in)		Metric (mm)
	Fraction	Decimal		Fraction	Decimal		Fraction	Decimal	
A	1-1/4	1.25	31.75	1-1/4	1.25	31.75	1-1/8	1.125	28.58
B	4-7/8	4.875	123.83	4-7/8	4.875	123.83	5-7/8	5.875	149.23
E	3/8	0.375	9.53	3/8	0.375	9.53	1/4	0.250	6.35
J	4-1/8	4.125	104.78	4-1/8	4.125	104.78	5-3/8	5.375	136.53
K	1-3/4	1.750	44.45	1-3/4	1.750	44.45	1-11/16	1.688	42.86
M	5/8	0.625	15.88	5/8	0.625	15.88	9/16	0.563	14.29
R	–	–	–	5/32	0.156	3.97	5/32	0.156	3.97
S	3/4	0.75	19.05	3/4	0.75	19.05	1-1/4	1.25	31.75

©2013 RUTHERFORD CONTROLS • WWW.RUTHERFORDCONTROLS.COM
USA: 2517 SQUADRON COURT, SUITE 104, VIRGINIA BEACH, VA 23453 • CANADA: 210 SHEARSON CRESCENT, CAMBRIDGE, ON N1T 1J6
PHONE • 1.800.265.6630 • 519.621.7651 • FAX: 1.800.482.9795 • 519.621.7939 • E-MAIL: SALES@RUTHERFORDCONTROLS.COM

Specifications

4107, 4108, 4119
4307, 4308, 4319

RUTHERFORD CONTROLS
A DORMA Group Company

In or Out…we make it Easy!®

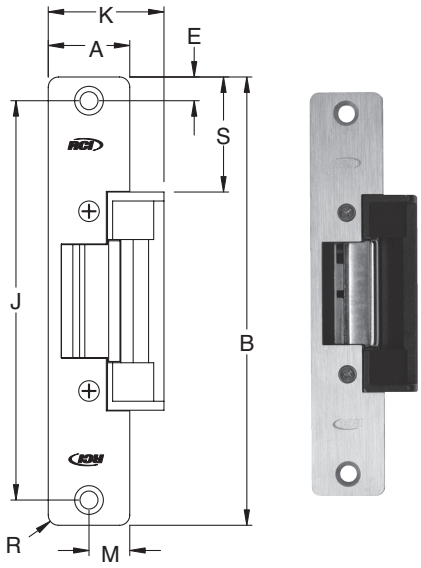

4107/4307
1-1/4″W x 6-7/8″H ANSI
(31.75 x 174.63mm)
Aluminum

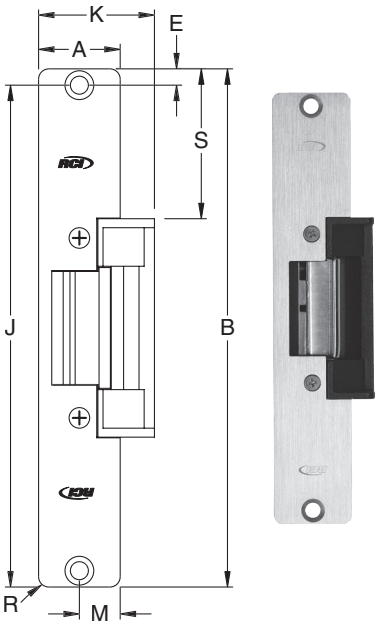

4108/4308
1-7/16″W x 7-15/16″H ANSI
(36.51 x 201.61mm)
Aluminum or Wood

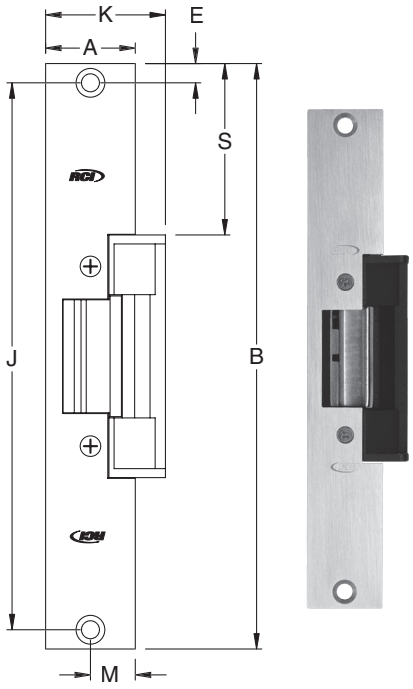

4119/4319
1-3/8″W x 9″H ANSI
(34.93 x 228.60mm)
Hollow Metal or Wood

PROFILE MEASUREMENT	41/4307			41/4308			41/4319		
	Imperial (in)		Metric (mm)	Imperial (in)		Metric (mm)	Imperial (in)		Metric (mm)
	Fraction	Decimal		Fraction	Decimal		Fraction	Decimal	
A	1-1/4	1.25	31.75	1-7/16	1.438	36.51	1-3/8	1.375	34.93
B	6-7/8	6.875	174.63	7-15/16	7.938	201.61	9	9.00	228.60
E	3/8	0.375	9.53	1/4	0.250	6.350	5/16	0.312	7.94
J	6-1/8″	6.125	155.58	7-7/16	7.438	188.91	8-3/8	8.375	212.73
K	1-3/4	1.750	44.45	1-3/4	1.750	44.45	1-53/64	1.828	46.43
M	5/8	0.625	15.88	23/32	0.719	18.26	11/16	0.688	17.46
R	5/32	0.156	3.97	5/32	0.156	3.97	–	–	–
S	1-3/4	1.75	44.45	2-9/32	2.281	57.94	2-5/8	2.625	66.68

©2013 RUTHERFORD CONTROLS • WWW.RUTHERFORDCONTROLS.COM
USA: 2517 SQUADRON COURT, SUITE 104, VIRGINIA BEACH, VA 23453 • CANADA: 210 SHEARSON CRESCENT, CAMBRIDGE, ON N1T 1J6
PHONE • 1.800.265.6630 • 519.621.7651 • FAX: 1.800.482.9795 • 519.621.7939 • E-MAIL: SALES@RUTHERFORDCONTROLS.COM

Specifications

4 Series

RUTHERFORD CONTROLS
A DORMA Group Company

In or Out…we make it Easy!®

MODEL(S)	MODE	VOLTAGE	CURRENT	DUTY	SOUND	AMPS*	OHMS†
41XX-01	Fail Locked	11-16V	AC	Intermittent	Buzz	0.50 / 0.70	16
41XX-05	Fail Locked Fail Locked	12V 12V	AC DC	Intermittent Continuous	Buzz Silent	0.15 0.20	61 61
41XX-08	Fail Locked Fail Locked	24V 24V	AC DC	Intermittent Continuous	Buzz Silent	0.07 0.11	215 215
43XX-06	Fail Unlocked	12V	DC	Continuous	Silent	0.20	61
43XX-09	Fail Unlocked	24V	DC	Continuous	Silent	0.11	215

*Ratings are based on maximum current draw at +10°C and include initial power-up current draw. †Nominal resistance at +25°C ± 7% tolerance.
NOTE: XX = Faceplate Code. Intermittent Duty = Energized less than 1 min. Continuous Duty = Energized 1 min. or more. Duty Ratio 1:5.
Dimensions shown below with 04 faceplate.

Profiles													
MEASUREMENT	C	D	F	G	H	L	N	P	Q	T	U	V	W
FRACTIONAL INCHES	3-3/8	7/8	1/8	1-3/4	9/16	1-1/2	13/32	13/32	3-5/8	1-7/8	15/16	17/32	3/4
DECIMAL INCHES	3.375	0.875	0.125	1.750	0.563	1.500	0.406	0.406	3.625	1.875	0.938	0.531	0.750
METRIC mm	85.73	22.23	3.18	44.45	14.29	38.10	10.32	10.32	92.08	47.63	23.81	13.49	19.05

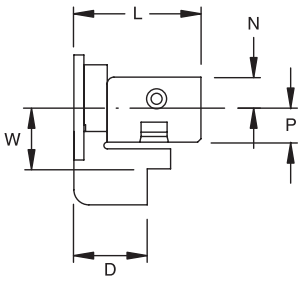

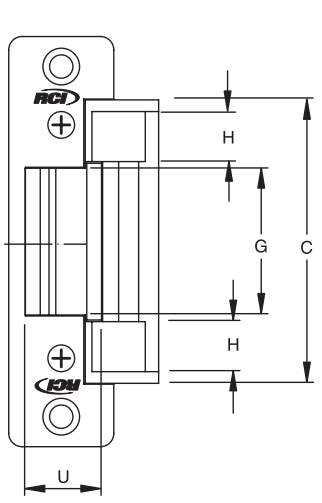

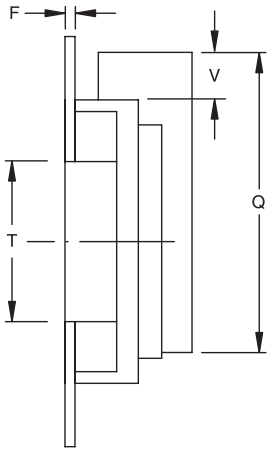

RCI also offers a complete line of Electromagnetic Locks, Electric Locks, Switches, Power Supplies, Keypads & Readers, Exit Devices, Systems & Door Hardware

©2013 RUTHERFORD CONTROLS • WWW.RUTHERFORDCONTROLS.COM
USA: 2517 SQUADRON COURT, SUITE 104, VIRGINIA BEACH, VA 23453 • CANADA: 210 SHEARSON CRESCENT, CAMBRIDGE, ON N1T 1J6
PHONE • 1.800.265.6630 • 519.621.7651 • FAX: 1.800.482.9795 • 519.621.7939 • E-MAIL: SALES@RUTHERFORDCONTROLS.COM