Electric Locks

12/24VDC **3513**

3 Series Commercial Grade Cabinet Locks

12/24VDC **3513DM**

RUTHERFORD CONTROLS
A DORMA Group Company

In or Out...we make it Easy!®



3513
1-1/8"D x 1-3/16"W x 2-7/8"L
(28.7mm x 30.1mm x 72.7mm)



3513DM Dual Monitoring
1-1/4"D x 1-3/16"W x 3-11/16"L
(32.0mm x 30.1mm x 94.0mm)

Features & Benefits

- Surface-mounted compact electric lock
- Field selectable fail locked or fail unlocked assembly
- Field selectable dual voltage 12/24VDC operation
- Stainless steel locking pin assembly
- 440 lbf/200 kgf holding force
- Low energy consumption (200mA @ 12VDC, 100mA @ 24VDC)
- Superior heavy duty metal construction
- The 3513DM version provides dual monitoring for enhanced security
- SPDT switches provide monitoring of the door and locking pin positions, which together confirm lock status
- Black finish
- Includes hardware kit

Cabinet Lock

Constructed with superior heavy duty metal, this compact electric lock is an ideal choice for securing any cabinet or drawer.

The 3513DM is easy to install with self-adjusting alignment tabs together with, side or top mounting capabilities. Four countersunk mounting holes also ensure that the lock is securely mounted. Lock mode is determined by the positioning of the lock solenoid.

The 3513DM Dual Monitoring version is ideal when monitoring of the door and locking pin are required.

Highlights

- Lock mode is field selectable
- Versatile side or top mounting
- Elongated holes on catch for adjustable mounting
- Dual monitoring of the door and locking pin (3513DM only)
- 3-year limited warranty

Applications

INTERIOR
- Filing Cabinets
- Drug Cabinets
- Jewelry Cases
- Showcases
- Key Cabinets
- Desk Drawers
- Cash Drawers
- Machine Access
- Vending Machines Covers

©2013 RUTHERFORD CONTROLS • WWW.RUTHERFORDCONTROLS.COM
USA: 2517 SQUADRON COURT, SUITE 104, VIRGINIA BEACH, VA 23453 • CANADA: 210 SHEARSON CRESCENT, CAMBRIDGE, ON N1T 1J6
PHONE • 1.800.265.6630 • 519.621.7651 • FAX: 1.800.482.9795 • 519.621.7939 • E-MAIL: SALES@RUTHERFORDCONTROLS.COM

Specifications

12/24VDC 3513

12/24VDC 3513DM

RUTHERFORD CONTROLS
A DORMA Group Company

In or Out...we make it Easy!®

Description of Features	
Lock Housing	3513 – 1-1/8″D x 1-3/16″W x 2-7/8″L (28.7mm x 30.1mm x 72.7mm) 3513DM – 1-1/4″D x 1-3/16″W x 3-11/16″L (32.0mm x 30.1mm x 94.0mm)
Locking Pin Assembly	3/16″ (4.5mm)
Operating Voltage	12VDC continuous; 24VDC continuous
Mode of Operation	Fail Unlocked or Fail Locked
Cycle Rating	500,000 cycles
Current Consumption	200mA @12VDC 100mA @ 24VDC
Door Monitor Switch Rated Voltage	3A for 125VAC and 2A for 30VDC
Locking Pin Monitor Switch	1A for 125VAC and 0.5A for 30VDC
Holding Force	440 lbf/200 kgf
Operating Temperature	14º to 104°F (-10º to 40°C)
Power Requirements	The compact locking unit can be operated with RCI's 10 Series regulated power supplies or 12VDC plug in transformer

NOTE: Monitor switches are rated at 0.5amps@12 or 24VDC

Slide Cabinet

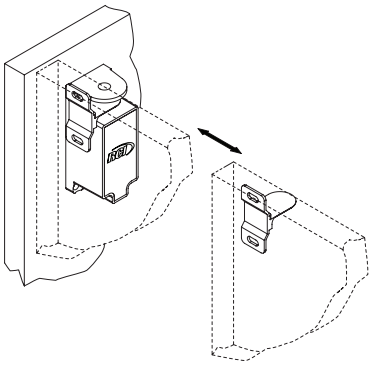

Installation Dimensions

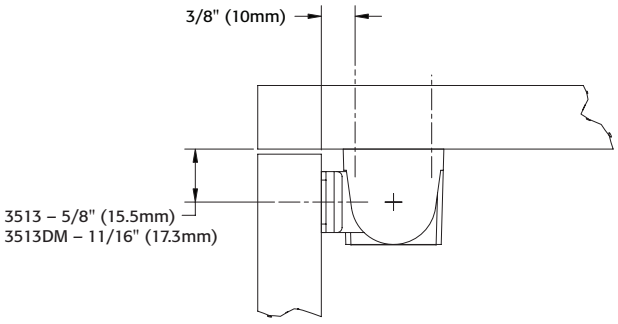

Swing Cabinet

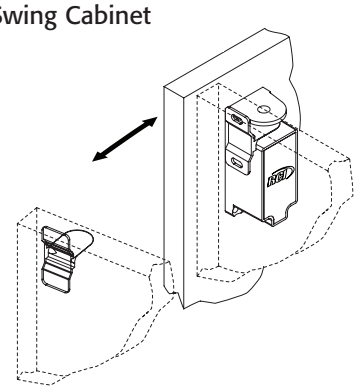

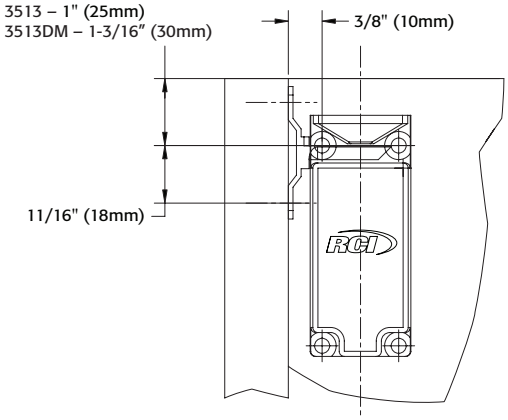

RCI also offers a complete line of Electromagnetic Locks, Electric Strikes, Power Supplies, Switches, Keypads & Readers, Exit Devices, Systems & Door Hardware.

©2013 RUTHERFORD CONTROLS • WWW.RUTHERFORDCONTROLS.COM
USA: 2517 SQUADRON COURT, SUITE 104, VIRGINIA BEACH, VA 23453 • CANADA: 210 SHEARSON CRESCENT, CAMBRIDGE, ON N1T 1J6
PHONE • 1.800.265.6630 • 519.621.7651 • FAX: 1.800.482.9795 • 519.621.7939 • E-MAIL: SALES@RUTHERFORDCONTROLS.COM