Electric Locks

Fail Unlocked **3360**

3 Series Commercial Grade Cushion-Lok®
for Tempered Glass Doors Without Frames

RUTHERFORD CONTROLS

In or Out…we make it Easy!®

Dimensions
5-11/16" x 1-9/16" x 1-25/32"
(145.0mm x 40.0mm x 45.0mm)



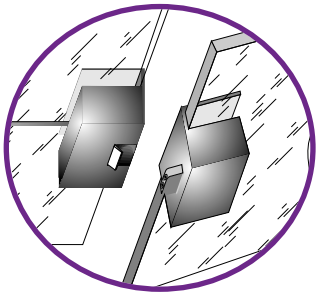

Special orders only.
Allow 12 weeks for delivery

Features & Benefits

- Unique pivot ensures gentle, shock-absorbing encapsulation of fixed locking bolt
- No prep required for glass doors (slotted housing adheres to glass surface)
- Specify 10mm or 12mm to accommodate glass thickness
- Non-handed
- Available in 12 or 24 VDC
- Use on single or pairs (requires two locks) of glass doors with glass side or transom panels
- Extruded aluminum slotted housing adheres to surface of the glass (adhesive included)
- All locks are "fail unlocked" by fire alarm or any power loss, ensuring life safety
- Electrical design prevents damage due to crossed wires
- Consult with your electric wire supplier for self-adhesive or decorative vision barrier conductors
- Latch monitor switch option
- Brushed Anodized Aluminum finish

Tempered Glass Door Lock

RCI offers the 3360 solution for securing tempered glass doors. This sleek glass door lock allows you to electrically control single, or pairs of tempered glass doors (without rails) which are surrounded by glass side-lites and transoms. This unique locking device will retrofit onto a glass door and glass side-lite (transom for pairs).

The 3360 Cushion-Lok® is a small, attractive, surface-mounted lock that consists of two parts – the electrical portion which mounts onto the side-lite (transom for pairs) and the mechanical portion which incorporates a fixed locking bolt that mounts onto the glass door edge (top for pairs), both of which are secured using adhesive supplied.

Options

LMS – Latch Monitor Switch

Highlights

- No preparation required for glass doors
- Shock-absorbing action
- Non-handed (reversible)
- 3-year limited warranty

Applications

- Commercial Centers
- Industrial Buildings
- Educational Facilities
- Health Care Facilities
- Retail Outlets
- Office Complexes

©2011 RUTHERFORD CONTROLS INT'L CORP. WWW.RUTHERFORDCONTROLS.COM

USA: 2517 SQUADRON COURT, SUITE 104, VIRGINIA BEACH, VA 23453 • CANADA: 210 SHEARSON CRESCENT, CAMBRIDGE, ON N1T 1J6
PHONE • 1.800.265.6630 • 519.621.7651 • FAX: 1.800.482.9795 • 519.621.7939 • E-MAIL: SALES@RUTHERFORDCONTROLS.COM

Specifications

Fail Unlocked 3360

RUTHERFORD CONTROLS

In or Out…we make it Easy!®

CUSHION-LOK® FOR TEMPERED GLASS DOORS WITH NO FRAME

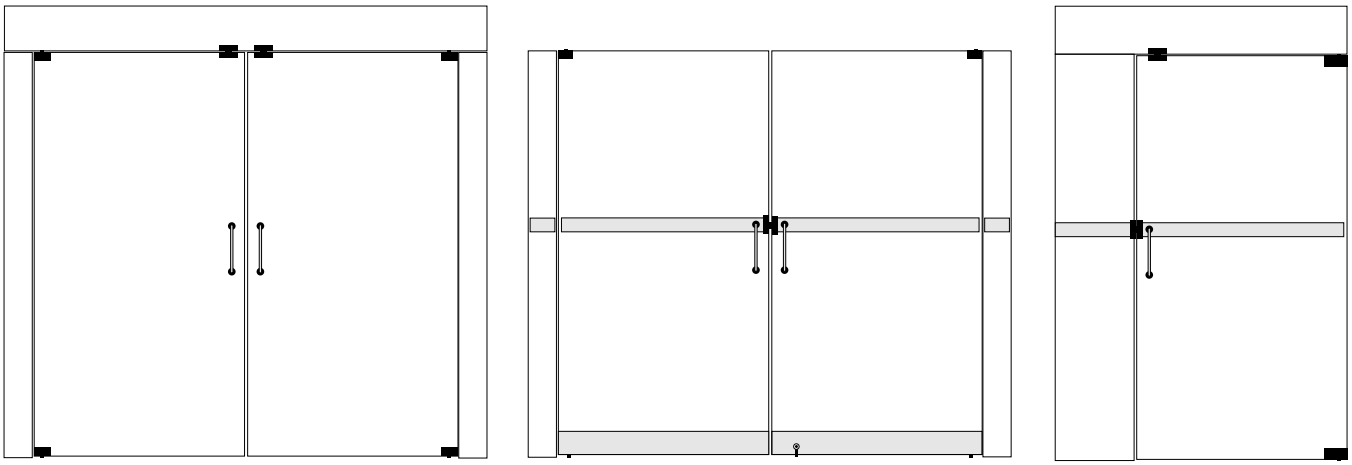

Specifications								
Model	**Mode**	**Code**	**Voltage**	**Current**	**Duty**	**Sound**	**Amps**	**Ohms**
3360	Fail Unlocked	06	12V	DC	Continuous	Silent	0.20	61
3360	Fail Unlocked	09	24V	DC	Continuous	Silent	0.11	215

Fail Unlocked = Fail Safe = PL; DC = Direct Current; Continuous Duty = Energized 1 min. or more

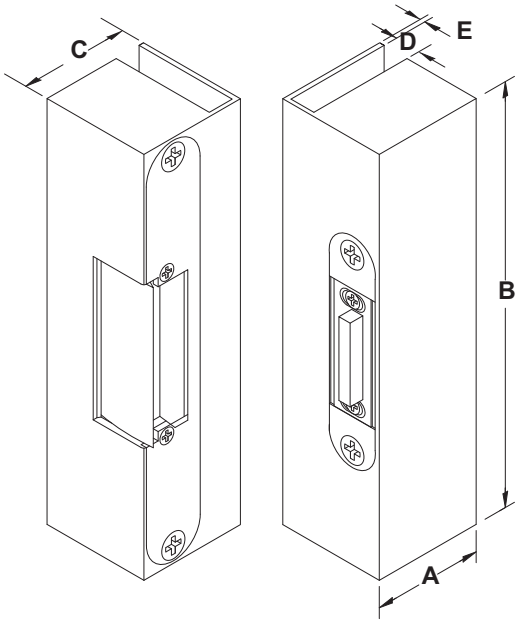

Dimensional Detail					
Measurements	A	B	C	D*	E
Fractional Inches	1-9/16	5-11/16	1-25/32	13/32	5/32
Decimal Inches	1.575	5.709	1.772	0.394	0.157
Metric mm	40.0	145.0	45.0	10.0	4.0

NOTE: Site dimensions are the installer's or frame manufacturer's responsibility. Horizontal centerlines are located by bolt location. * Also available in 12mm (15/32")

NOTE: Not to scale. Specifications are subject to change without notice.

RCI also offers a complete line of Electromagnetic Locks, Electric Strikes, Power Supplies, Switches, Keypads & Readers, Exit Devices, Systems & Door Hardware.

©2011 RUTHERFORD CONTROLS INT'L CORP. WWW.RUTHERFORDCONTROLS.COM
USA: 2517 SQUADRON COURT, SUITE 104, VIRGINIA BEACH, VA 23453 • CANADA: 210 SHEARSON CRESCENT, CAMBRIDGE, ON N1T 1J6
PHONE • 1.800.265.6630 • 519.621.7651 • FAX: 1.800.482.9795 • 519.621.7939 • E-MAIL: SALES@RUTHERFORDCONTROLS.COM