INSTALLATIONS

TP-4/7, TP-S6, TP-L6

Trim Plates for 4, 6, & 7 Series RCI Strikes

RUTHERFORD CONTROLS

These Trim Plates can easily compensate for minor irregularities in the Lip Bracket cutout.

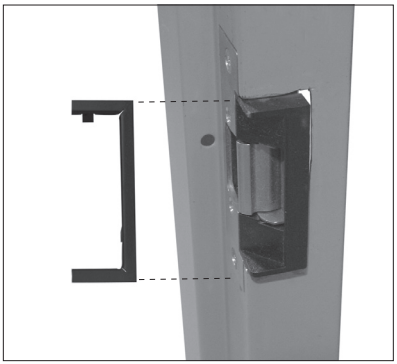

Make sure the Trim Plate series label matches the Strike series you are installing.

L6 = Low Profile 6 Series
S6 = Standard Profile 6 Series
4/7 = 4 Series or 7 Series

Position the Trim Plate on the frame cut-out to verify fit and coverage.

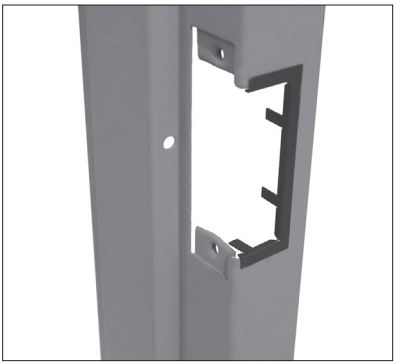

Adjust cut-out if required.

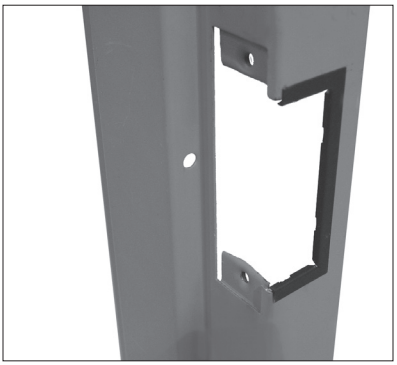

Bend the four tabs to hold the Trim Plate onto the frame.

For a tighter fit, pre-bend the two long flange tabs before sliding onto the frame where space allows.



Secure the strike to the frame as per strike installation instructions.

© 2011 RUTHERFORD CONTROLS INT'L CORP. WWW.RUTHERFORDCONTROLS.COM

USA: 2517 SQUADRON COURT, SUITE 104, VIRGINIA BEACH, VA 23453 • CANADA: 210 SHEARSON CRESCENT, CAMBRIDGE, ON N1T 1J6
PHONE • 1.800.265.6630 • 519.621.7651 • FAX: 1.800.482.9795 • 519.621.7939 • E-MAIL: SALES@RUTHERFORDCONTROLS.COM

PCN110045
R07/11SH