INSTALLATION

GateMag® 8380

Z BRACKET & POST BRACKET ELECTROMAGNETIC LOCK ACCESSORY

RUTHERFORD CONTROLS
A DORMA Group Company

In or Out... we make it Easy!®

Swinging Gate "Z" Bracket Instructions

1. Installation of this product should be done by an experienced installer with knowledge of this product. Read and conform to each of the Pre-Installation Instructions supplied with your Rutherford Controls 8380 GateMag®. Failure to conform to the Pre-Installation Instructions is a misuse of product and could result in serious bodily injury or property damage. This product must be used only with a Rutherford Controls 8380 GateMag®.
2. Back mount 8380 GateMag® to stationary post for single gate or to fixed leaf of the gate for double-swing gate per template STEP 2.
3. Using a hammer install the clinch nut into the center hole of bracket (A) from the back side as shown below.
4. Assemble bracket (A) & bracket (B) together to form a "Z" using 2 screws in each slot. Do not over tighten to allow adjustment.
5. Pass bolt with rubber head through the armature plate. Add 3 washers (steel - rubber - steel) onto bolt. Carefully apply thread locking compound to the exposed threads. While aligning pins, drive the bolt into clinch nut on bracket A.

   NOTE: Do not over tighten armature plate. It must remain movable to allow surface alignment with electromagnetic lock.
6. With gate in closed position, carefully align armature plate to GateMag®'s electromagnetic face. Secure Z bracket assembly to swinging portion of gate. Make sure there is good contact of lock with armature plate and tighten adjustment screws.

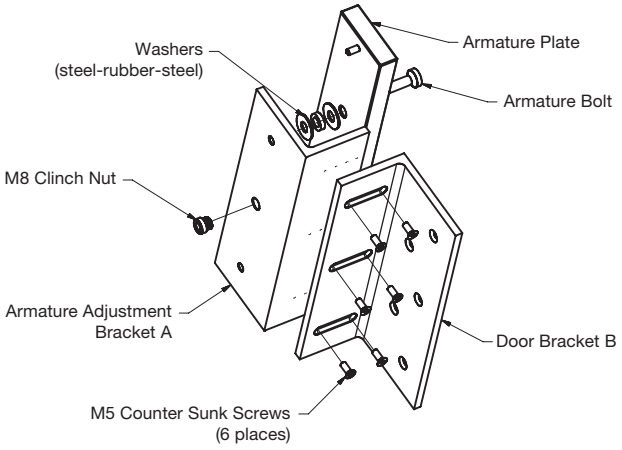

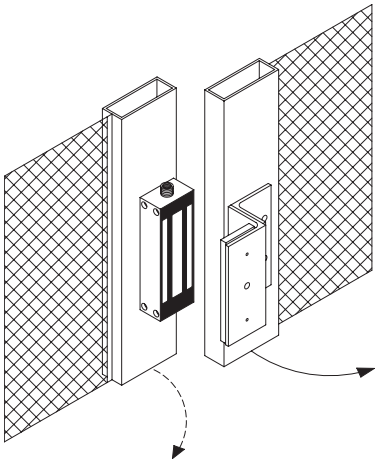

Note: For proper operation one side of the double gate pair should be stationary. Lock may not hold correctly if both gates swing freely.

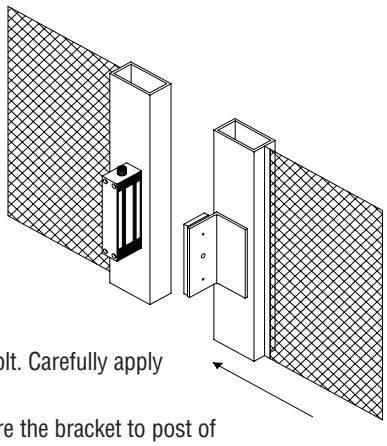

Sliding Gate Post Bracket Installations

1. Installation of this product should be done by an experienced installer with knowledge of this product. Read and conform to each of the Pre-Installation Instructions supplied with your Rutherford Controls 8380 GateMag®. Failure to conform to the Pre-Installation Instructions is a misuse of product and could result in serious bodily injury or property damage. This product must be used only with a Rutherford Controls 8380 GateMag®.
2. Side mount 8380 GateMag® to stationary post per template STEP 2.
3. Using a hammer install the clinch nut into the center hole of the bracket from the backside.
4. Pass bolt with rubber head through the armature plate. Add 3 washers (steel - rubber - steel) onto bolt. Carefully apply thread locking compound to the exposed threads. While aligning pins, drive the bolt into clinch nut.
5. With gate in closed position, carefully align armature plate to GateMag®'s electromagnetic face. Secure the bracket to post of sliding gate as required.

WARNING: Improper installation, maintenance, inspection or use of this or any related product may cause the electromagnet lock, armature plate and associated hardware to disengage and fall, causing serious bodily injury and property damage. Rutherford Controls Int'l Inc. and/or Rutherford Controls Int'l Corp. will not be liable to the installer, purchaser, end user or anyone else for damage or injury to person or property due to improper installation, care, storage, handling, maintenance, inspection, abuse, misuse or act of God or nature involving this or any related product.

NOTE: Not to scale. Specifications are subject to change without notice.

©2013 RUTHERFORD CONTROLS • WWW.RUTHERFORDCONTROLS.COM
USA: 2517 SQUADRON COURT, SUITE 104, VIRGINIA BEACH, VA 23453 • CANADA: 210 SHEARSON CRESCENT, CAMBRIDGE, ON N1T 1J6
PHONE • 1.800.265.6630 • 519.621.7651 • FAX: • 519.621.7939 • E-MAIL: SALES@RUTHERFORDCONTROLS.COM