INSTALLATIONS

TD-30/TD-30A

30 Second Fixed and Adjustable Timers

Typical Installation for **TD-30A ADJUSTABLE RELOCK TIMER** with Fail Secure Strikes
TD-30A is adjustable from .1 - 30 seconds

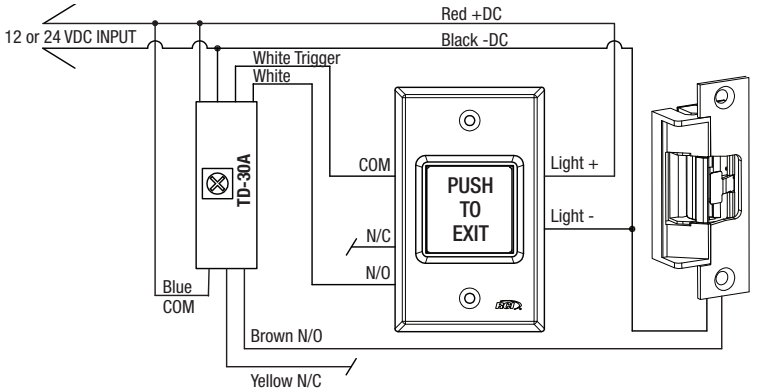

- Both timers are powered continuously
- Voltage for both timers is 12 to 24 VDC
- Each push on exit button will restart the delay period.
- The trigger is connected to a N/O push button
- Double sided tape is provided to position the timer inside the switch junction box.

Typical Installation for **TD-30 FIXED RELOCK TIMER** with Electromagnetic Lock for Access Controlled Egress Doors with 30 Second Minimum Unlock Requirement

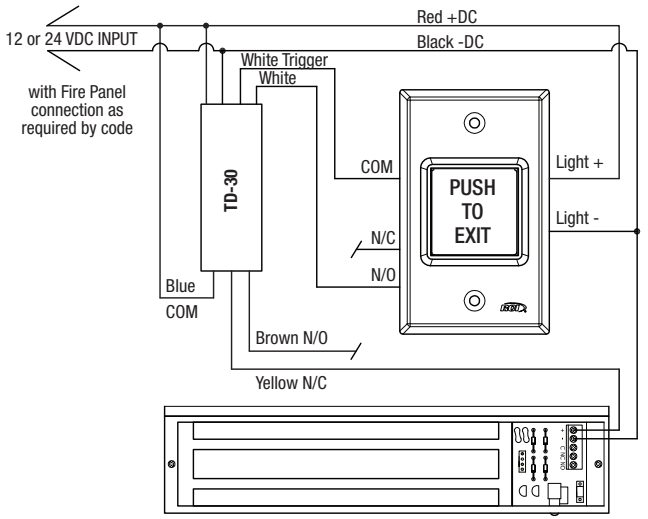

© 2011 RUTHERFORD CONTROLS INT'L CORP. WWW.RUTHERFORDCONTROLS.COM

USA: 2517 SQUADRON COURT, SUITE 104, VIRGINIA BEACH, VA 23453 • CANADA: 210 SHEARSON CRESCENT, CAMBRIDGE, ON N1T 1J6
PHONE • 1.800.265.6630 • 519.621.7651 • FAX: 1.800.482.9795 • 519.621.7939 • E-MAIL: SALES@RUTHERFORDCONTROLS.COM

PCN110045
R07/11SH