**INSTALLATION**

**PDM-4**
**PDM-8**

RUTHERFORD CONTROLS
A DORMA Group Company

*In or Out... we make it Easy!®*

# PDM-4
# PDM-8

## Power Distribution Board
## Installation and Specifications Manual

ISPSPDM4-8
PCN15024
R07/15GR

© 2015 RUTHERFORD CONTROLS INT'L | A DORMA GROUP COMPANY

WWW.RUTHERFORDCONTROLS.COM • PHONE: 1.800.265.6630 • FAX: 1.800.482.9795 • E-MAIL: SALES@RUTHERFORDCONTROLS.COM

## Description

The PDM-4 and PDM-8 board distributes a DC source into 4 or 8 outputs. The output voltage and total current available is determined by the input supply. When installed into a power supply, service time can be greatly reduced by the output indicator LED's. If an output fuse is blown the accompanying LED will be off. Simply identifying the device connected to this output will allow for a problem to be quickly corrected. In addition to short circuit protection the input terminals also have a surge protector that can absorb a 1500 Watt spike or surge to protect connected devices.

## Features

- Converts a single input to 4 or 8 separately protected outputs
- Separate RED power indicator LED for each output.

## Installation Instructions (See Fig. 1 and 2)

1) Mount the distribution board in a suitable location as required.
2) Connect power to input terminals, (-) is negative and (+) is positive.
   Observe proper polarity
3) Connect devices to be powered to output CH terminals. Observe proper polarity.
4) Apply power to input terminals and test all connected devices.

**Note:**

- Unit is to be powered from RCI 10 Series power supply or a UL listed power supply
- Maximum torque of 7in*lb for black input and output terminals
- Check end product install instructions for conditions of use

# Specifications

- **For UL listed power supply.**
- **UL 294 and ULC S319 Class I Access Control System Units.**

## PDM-4

**Dimensions**

Length:
3-3/4" 95.3mm
Width:
2-3/16" 56.3mm
Height:
13/16" 20.6mm

**Electrical**

Current Draw with no load: 30mA
Current Handling: Rated 2A per output
30VDC Max
Fuse: 2Amp

**Environmental:**

Use in a controlled environment.

## PDM-8

**Dimensions**

Length:
3-3/4" 95.3mm
Width:
4-13/16" 122.7mm
Height:
13/16" 20.6mm

**Electrical**

Current Draw with no load: 60mA
Current Handling: Rated 2A per output
30VDC Max

**Warning: Improper wiring connections may result in damage to these products.**
**Mise en garde: Un mauvais raccordement des câbles risque d'endommager ce produit.**

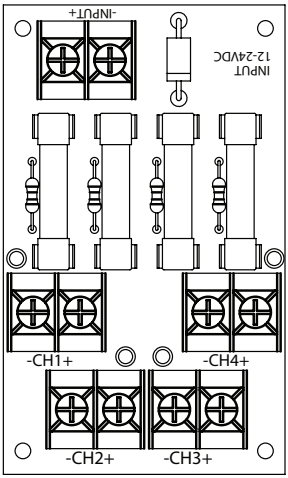


**Fig. 1** PDM-4

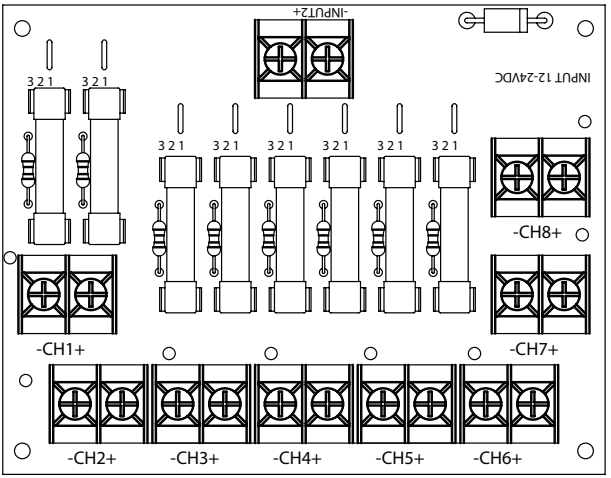


**Fig. 2** PDM-8

## PDM-4 and PDM-8
## Troubleshooting

| Problem | Solution |
|---|---|
| Output LED's do not turn on when powered. | - If using DC power, check input polarity.<br><br>- Check that input power supply voltage is present and current capacity is sufficient for total current draw of all connected equipment. |

**Notes:**

## For Technical Support:

**1-800-265-6630 or 519-621-7651**
**www.rutherfordcontrols.com**