ISMBK10_R0711_ISMBK10.qxd 14/08/2011 7:09 PM Page 1

INSTALLATION

Mounting Bracket Kit for Electric Strikes

RUTHERFORD CONTROLS

In or Out... we make it Easy!®

Instructions

Mounting bracket kit is for use with aluminum and steel frames that do not have factory installed mounting tabs for electric strike installation.

1. Prepare the frame as shown in the installation instructions (shipped separately with corresponding products). Fasten the mounting bracket to the faceplate of the strike, selecting the appropriate shims for your installation.
2. Using the assembled strike and brackets as a template, place against the frame and mark the mounting hole locations. Remove and drill a 3/16" hole in frame for each mounting bracket and countersink the frame.
3. Remove the brackets from the faceplate and install in the frame using the 12-24 x 3/8" machine screws supplied. Tabs are zinc plated and drilled and tapped for this purpose.
4. Make final electrical connections as described in installation instructions (separate) and mount strike to the brackets with the 12-24 x 3/8" machine screws.

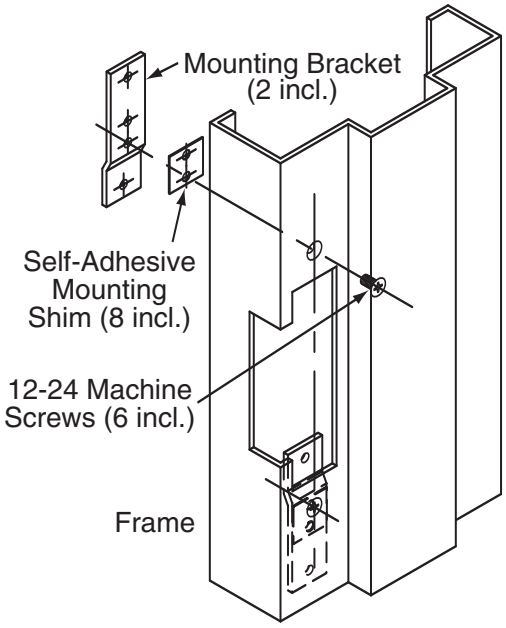

©2011 RUTHERFORD CONTROLS INT'L CORP. WWW.RUTHERFORDCONTROLS.COM

USA: 2517 SQUADRON COURT, SUITE 104, VIRGINIA BEACH, VA 23453 • CANADA: 210 SHEARSON CRESCENT, CAMBRIDGE, ON N1T 1J6
PHONE • 1.800.265.6630 • 519.621.7651 • FAX: 1.800.482.9795 • 519.621.7939 • E-MAIL: SALES@RUTHERFORDCONTROLS.COM

PCN110045
R07/11SH