I N S T A L L A T I O N

6 Series Electric Strike Lip Bracket Extensions

RUTHERFORD CONTROLS

In or Out... we make it Easy!®

INSTRUCTIONS

Drilling Instructions

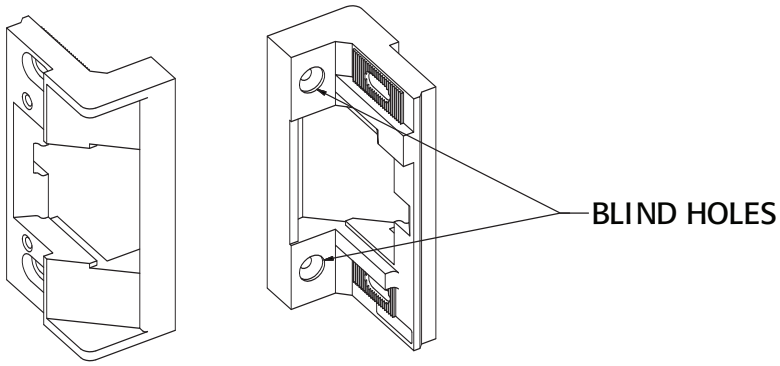

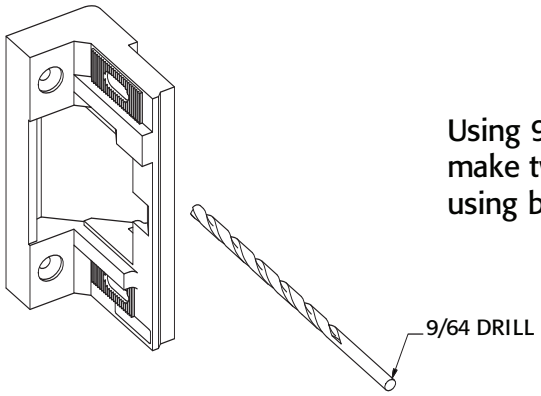

Using 9/64" Drill, make two thru holes using blind holes.

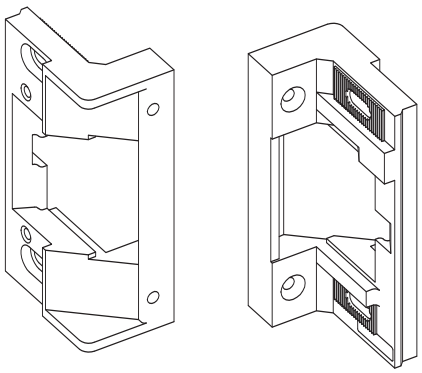

Follow Electric Strike Lip Bracket Extension installation instructions on the reverse side for following steps.

ISLE-E

© 2011 RUTHERFORD CONTROLS INT'L CORP. • WWW.RUTHERFORDCONTROLS.COM
USA: 2517 SQUADRON COURT, SUITE 104, VIRGINIA BEACH, VA 23453 • CANADA: 210 SHEARSON CRESCENT, CAMBRIDGE, ON N1T 1J6
PHONE: 1.800.265.6630 519.621.7651 • FAX: 1-800482-9795 519.621.7939 • E-MAIL: SALES@RUTHERFORDCONTROLS.COM

PCN110045
R07/11SH

INSTRUCTIONS
For Center-Hung Doors or Deep-Reveal Frames

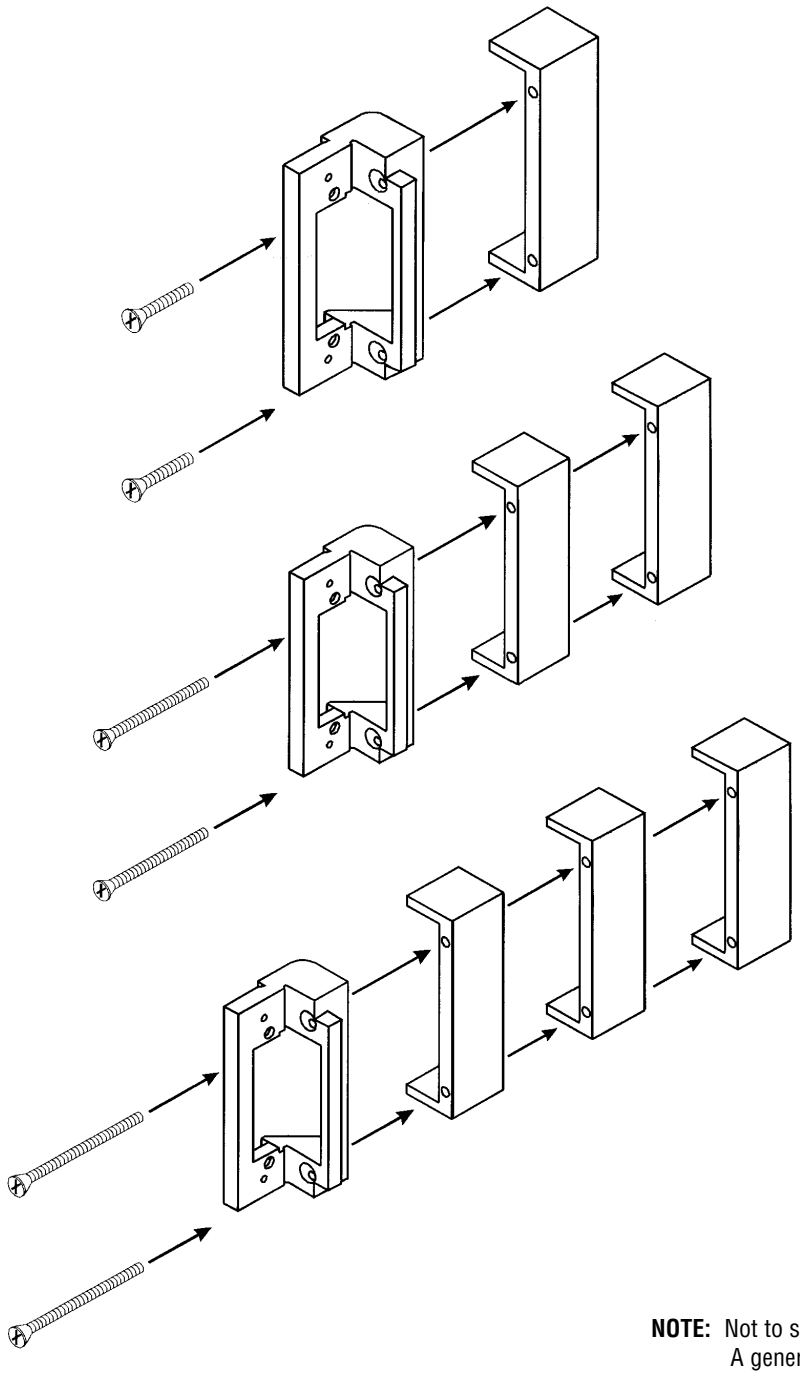

1″ Extension
#6-32 x 1″ Screws

2″ Extension
#6-32 x 2″ Screws

3″ Extension
#6-32 x 3″ Screws

NOTE: Not to scale. Specifications are subject to change without notice.
A generic lip bracket extension diagram shown as example only.

© 2011 RUTHERFORD CONTROLS INT'L CORP. • WWW.RUTHERFORDCONTROLS.COM
USA: 2517 SQUADRON COURT, SUITE 104, VIRGINIA BEACH, VA 23453 • CANADA: 210 SHEARSON CRESCENT, CAMBRIDGE, ON N1T 1J6
PHONE: 1.800.265.6630 519.621.7651 • FAX: 1-800482-9795 519.621.7939 • E-MAIL: SALES@RUTHERFORDCONTROLS.COM