INSTALLATION

GLASS DOOR BRACKET

Electromagnetic Lock Accessory

RUTHERFORD CONTROLS
A DORMA Group Company

In or Out... we make it Easy!®

Instructions

(For RCI 8310, 8320, 8371, 8372 and 8375 Electromagnetic Locks)

Read and conform to each of the Pre-Installation Instructions supplied with Rutherford Controls electromagnetic lock.

This product must be used only with a Rutherford Controls electromagnetic lock.

Failure to conform to these requirements is a misuse of the product and could result in serious bodily injury or property damage.

1. To determine the correct mounting position for the door bracket and the electromagnetic lock, use the template supplied with the electromagnetic lock.
2. Fold the template up along the dotted line. Place the template over the armature plate guide pins. Temporarily attach the armature plate and template to the door bracket. (The directions on the template should be facing you).
3. Place the door bracket on the door. Slide the bracket and template along the top of the door until the edge of the template rests 1-1/4" (32mm) from edge of the vertical jamb. Secure template with masking tape. Mark the position of the door bracket on the glass door. Mark the drill hole positions on the door header for mounting the magnet. Do not use as a doorstop. This will void warranty. Remove door bracket and template.
4. Mount the door bracket to the glass door using the marks on the glass door as a guide. The rubber shim should be wrapped over the glass. Place the metal shim between the armature securing plate and the rubber shim. Secure to door by tightening the two set screws.
5. Position bolt with rubber head through the armature plate. Add 3 washers (steel – rubber – steel) onto bolt between the armature plate and Glass Door Bracket. Carefully apply thread locking compound to exposed thread. While aligning pins, secure armature plate to the door bracket. NOTE: Do not over tighten armature plate. It must remain movable to allow surface alignment with Electromagnetic Lock face.
6. Drill the holes for mounting the electromagnetic lock as per the instructions on the template. Attach the Electromagnetic Lock mounting bracket to the door header using the round head screws provided through the slots. NOTE: Do not over tighten as the bracket may need adjustment. Adjust the mounting bracket so that it and the Armature plate form a right angle. Secure mounting bracket in position with TEK™ screws. Using the mounting bracket as a template, drill the 3⁄4" wire hole.
7. Tip the electromagnetic lock to expose the captive mounting screws. Carefully apply thread locking compound to exposed threads. Install the electromagnet to the mounting bracket using the cap screws provided. Connect the electrical wiring as per instruction sheet provided with the electromagnetic lock.

WARNING: Improper installation, maintenance, inspection or usage of this or any related product may cause the electromagnetic lock, armature plate and associated hardware to disengage and fall, causing serious bodily injury and property damage. Rutherford Controls Int'l Inc. and/or Rutherford Controls Int'l Corp. will not be liable to the installer, purchaser, end user or anyone else for damage or injury to person or property due to improper installation, care, storage, handling, maintenance, inspection, abuse, misuse or act of God or nature involving this or any related product.

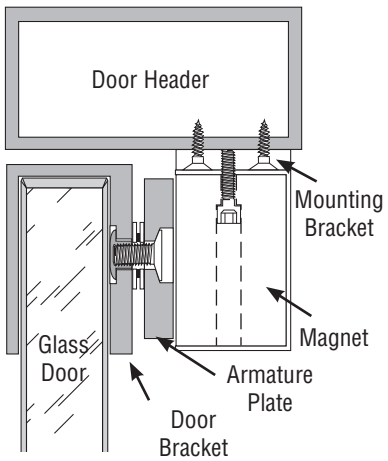

DIMENSIONS			
	8310/20	**8371/72**	**8375**
A	7.48" [190mm]	7.24" [184mm]	5.20" [132mm]
B	0.06" [1.5mm]	0.06" [1.5mm]	0.06" [1.5mm]
C	0.38" [9.5mm]	0.38" [9.5mm]	0.38" [9.5mm]
D	2.61" [66.5mm]	1.63" [41.5mm]	1.36" [34.5mm]
		1/2" Model	
E	1.10" [28mm]	1.10" [28mm]	1.10" [28mm]
		3/4" Model	
E	1.36" [34.5mm]	1.36" [34.5mm]	1.36" [34.5mm]

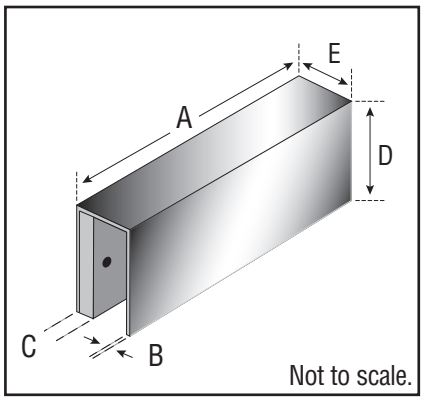

NOTE: Illustrations are not to scale. Glass doors are often referred to as Herculite doors.

© 2014 RUTHERFORD CONTROLS INT'L | A DORMA GROUP COMPANY
WWW.RUTHERFORDCONTROLS.COM • PHONE: 1.800.265.6630 • FAX: 1.800.482.9795 • E-MAIL: SALES@RUTHERFORDCONTROLS.COM
PCN14076
R09/14TG