INSTALLATION

F4 Series

ELECTRIC STRIKES

RUTHERFORD CONTROLS
A DORMA Group Company

In or Out... we make it Easy!®

INSTRUCTIONS

1. Determine the vertical centerline of the door lock face and the horizontal centerline of the latch.
   IMPORTANT: When determining the horizontal centerline observe the following:
   FOR MORTISE LOCKS: Align the angled ramps of the lip bracket with the deadlock trigger of the mortise latch.
   FOR CYLINDRICAL LOCKS: Align the center of the latch with the center of the strike opening.**
2. Transfer both the horizontal and vertical centerlines to the door frame.**
3. Prepare the door frame for cutting as per the appropriate drawing.
4. If required, install the optional "no weld" mounting brackets as per the instructions on page 2.
5. Connect the incoming wiring from the power supply to the terminal screws on the strike insert. RCI door strikes are not polarity sensitive although be certain to observe proper polarity if a suppression diode is required for access control applications.
6. Install the door strike in the door frame using the screws provided.

F4104 Aluminum Frames 1-1/2 Insert Depth

MEASUREMENT	FRACTIONAL INCHES	DECIMAL INCHES	METRIC mm
A	1-1/4"	1.250	31.75
B	4-7/8"	4.875	123.83
C	3-3/8"	3.375	85.73
D	29/32	0.906	23.02
E	3/8"	0.375	9.53
F	1/8"	0.125	3.18
G	1-11/16"	1.688	42.86
X	Vertical Centre Line of Door Lock and Mounting Face Plate**		
R	5/32"	0.156	3.97
K	4-1/8"	4.125	104.78
M	12-24	N/A	N/A

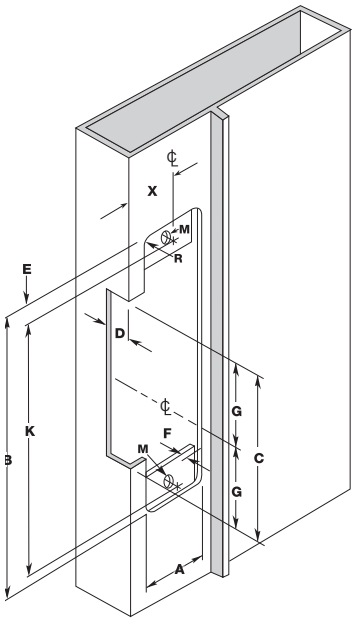

F4114 Hollow Metal Frames 1-1/2 Insert Depth

MEASUREMENT	FRACTIONAL INCHES	DECIMAL INCHES	METRIC mm
A	1 1/4"	1.250	31.75
B	4 7/8"	4.875	123.83
C	3-3/8"	3.375	85.73
D	29/32	0.906	23.02
E	3/8"	0.375	9.53
F	1/8"	0.125	3.18
G	1-11/16"	1.688	42.86
X	Vertical Centre Line of Door Lock and Mounting Face Plate**		
K	4-1/8"	4.125	104.78
M	12-24	N/A	N/A

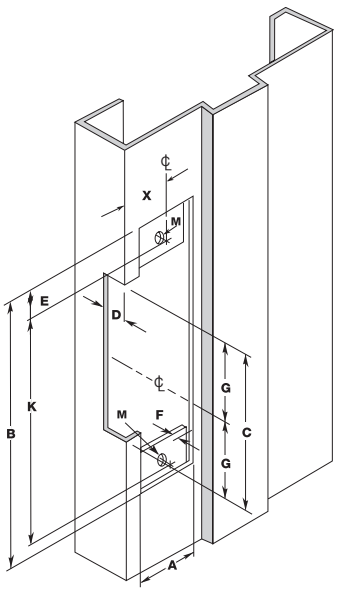

NOTE: Specifications subject to change without notice.

* **Dimension F** is measured from face of mounting tab to face of frame.

** **Dimension X** on the drawing is determined by the vertical centerline of the door. If the latch incorporates a deadlocking pin additional steps will be necessary to ensure proper operation of the deadlocking pin. Measure the thickness of the deadlocking pin and add this thickness to Dimension X to relocate the vertical centerline to an appropriate distance on the frame.

©2013 RUTHERFORD CONTROLS • WWW.RUTHERFORDCONTROLS.COM

USA: 2517 SQUADRON COURT, SUITE 104, VIRGINIA BEACH, VA 23453 • CANADA: 210 SHEARSON CRESCENT, CAMBRIDGE, ON N1T 1J6
PHONE • 1.800.265.6630 • 519.621.7651 • FAX: • 519.621.7939 • E-MAIL: SALES@RUTHERFORDCONTROLS.COM

PCN13064
R10/13CA

INSTALLATION

Mounting Tab Kit Instructions

RUTHERFORD CONTROLS
A DORMA Group Company

In or Out... we make it Easy!®

Mounting tab kit is for use with aluminum and steel frames that do not have factory installed mounting tabs for electric strike installation.

1. Prepare the frame as shown in the appropriate drawing. Fasten the mounting tab to the faceplate of the strike, selecting the appropriate shims for the installation.
2. Using the assembled strike and tabs as a template, place against the frame and mark the mounting hole locations that suit best. Remove and drill two 3/16” holes in the frame for each mounting tab and countersink the frame.
3. Remove the tabs from the faceplate and install in the frame using the 12-24 x 3/8” machine screws supplied. Tabs are zinc plated and drilled and tapped for this purpose.
4. Make final electrical connections per wiring instructions and mount strike to the tabs with the 12-24 x 3/8” machine screws.

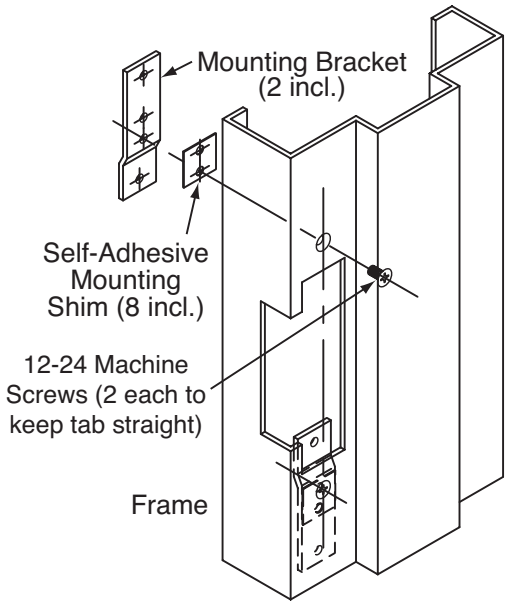

©2013 RUTHERFORD CONTROLS • WWW.RUTHERFORDCONTROLS.COM
USA: 2517 SQUADRON COURT, SUITE 104, VIRGINIA BEACH, VA 23453 • CANADA: 210 SHEARSON CRESCENT, CAMBRIDGE, ON N1T 1J6
PHONE • 1.800.265.6630 • 519.621.7651 • FAX: • 519.621.7939 • E-MAIL: SALES@RUTHERFORDCONTROLS.COM