FRAME PREP INSTRUCTIONS

Fail Locked F2164 (Fire-Rated) & Fail Unlocked 2364

ELECTRIC STRIKE

RUTHERFORD CONTROLS
A DORMA Group Company

In or Out... we make it Easy!®

Frame Prep Dimensions

MEASUREMENT	FRACTIONAL INCHES	DECIMAL INCHES	METRIC mm
A	1-1/4”	1.250	31.75
B	4-7/8”	4.875	123.83
C	3-3/8”	3.375	85.73
D	F + 1-7/16”	F + 1.438	F + 36.51
E	3/8”	0.375	9.53
F	3/16”*	0.188*	4.76*
G	1-11/16”	1.688	42.86
X	Vertical Centre Line of Door Lock and Mounting Face Plate**		
K	4-1/8”	4.125	104.78
M	12-24	N/A	N/A
Z	3-5/16”	3.315	84.14

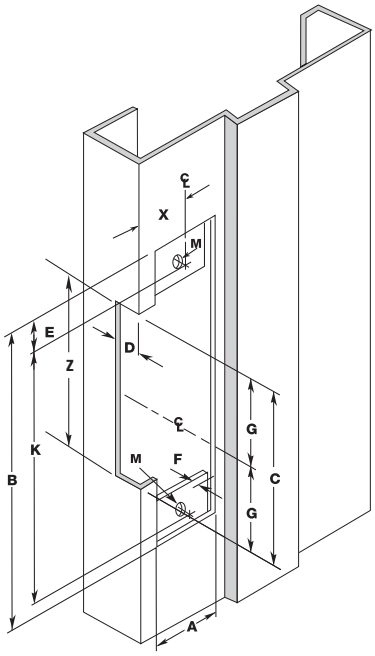

NOTE: Specifications subject to change without notice.

***** **Dimension F** is measured from face of mounting tab to face of frame.

****** **Dimension X** on the drawing is determined by the vertical centerline of the door. If the latch incorporates a deadlocking pin additional steps will be necessary to ensure proper operation of the deadlocking pin. Measure the thickness of the deadlocking pin and add this thickness to Dimension X to relocate the vertical centerline an appropriate distance on the frame.

For Cutting ANSI Prep Frames

1. Place the folded template square to the frame. Horizontally align holes marked on the template with the mounting holes in frame.



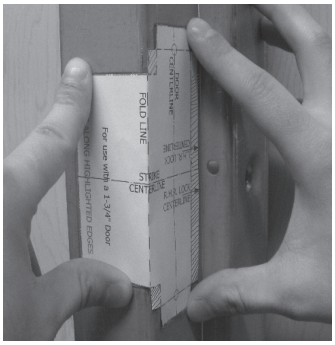

2. Peel adhesive backing and paste the folded template square to the frame.

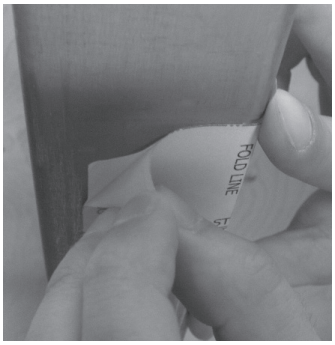

3. Carefully cut the frame inside the un-shaded area marked on the template. Install strike per installation instructions ISF2

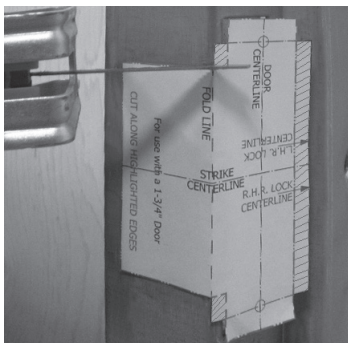



© 2016 RUTHERFORD CONTROLS INT'L | A DORMA GROUP COMPANY
WWW.RUTHERFORDCONTROLS.COM • PHONE: 1.800.265.6630 • FAX: 1.800.482.9795 • E-MAIL: SALES@RUTHERFORDCONTROLS.COM
PCN16035
R06/16GR

Frame Prep Instructions (Continued)

For Cutting Frames without ANSI Prep

1. Mark the horizontal Lock Body Centerline on the door. Close the door and transfer the Lock Body Centerline to the frame.

If the door isn't flush to the frame in the closed position, mark the depth of the closed door on the frame. Measure half of the door thickness back toward the door stop and mark the vertical Door Centerline on the frame.

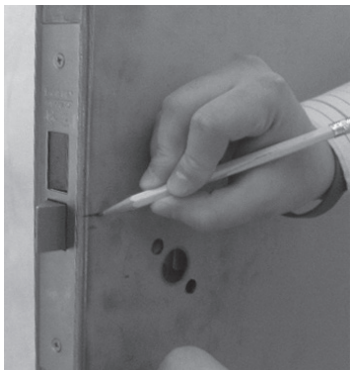

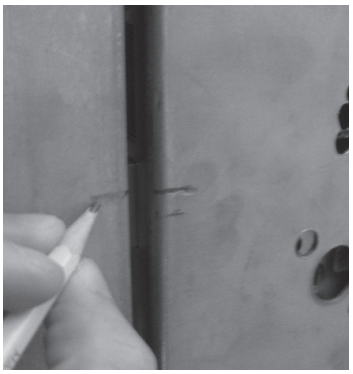

2. Horizontally align the proper Template Lock Centerline with the Lock Body Centerline marked on the frame. Peel adhesive backing and paste the folded template square to the frame.

If the door isn't flush to the frame when closed, tear the template at the fold line. Align the faceplate portion vertically with the Door Centerline and match the template Lock Centerline with the Lock Body Centerline marked on the frame.
Carefully paste the front portion of the template on face of frame to align with the faceplate portion.

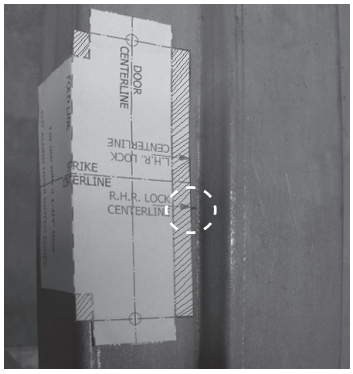

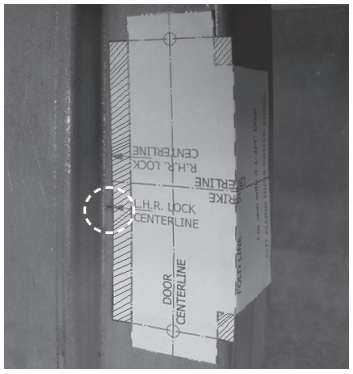

3. Carefully cut the frame inside the un-shaded area marked on the template.
Follow Mounting Tab Installation Instructions.



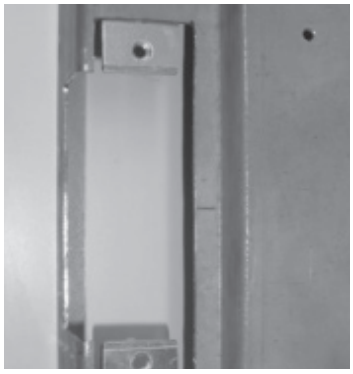

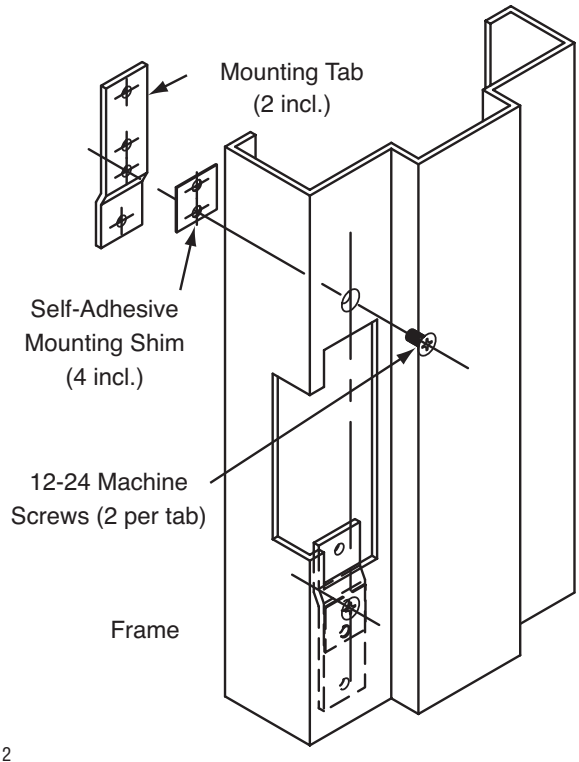

a) Fasten the mounting tabs to the faceplate of the strike, selecting the appropriate shims for the installation.

b) Using the assembled strike and tabs as a template, place against the frame and mark the mounting hole locations. Remove and drill a 3/16" hole in frame for each mounting tab and countersink the frame.

c) Remove the tabs from the faceplate and install in the frame using the 12-24 x 3/8" machine screws supplied. Tabs are plated and drilled and tapped for this purpose.

d) Install strike per installation instructions, ISF2.