INSTALLATION

F2-LM

LATCH MONITOR SWITCH MODULE
For F2164 and 2364 ELECTRIC STRIKES

RUTHERFORD CONTROLS
A DORMA Group Company

In or Out...we make it Easy!®

IMPORTANT: 3 ribs on the LM lever may require trimming for its proper engagement with 3/4" latch bolt.

Improved design to accomodate 1/2" - 3/4" latch throw.

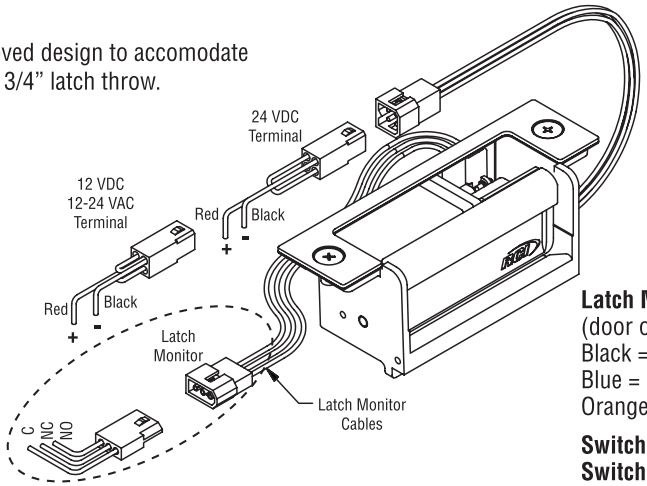

Patent Pending

Latch Monitor Wires
(door open no latch)
Black = Common (C)
Blue = Normally Closed (NC)
Orange = Normally Open (NO)

Switch Rating: 2 Amp @ 24 VDC
Switch Type: SPDT

Step 1: Carefully remove faceplate from strike insert. Make sure the deadbolt and deadlatch alignments don't change.
Step 2: Move the door towards the strike so that the latch touches the keeper.
Step 3: Mark latch limit lines on keeper (Fig. 1).
Step 4: Open the door, mount the Latch Monitor Module on the strike housing so that it is between the latch limit lines marked on keeper.
Step 5: Make electrical connection, position the faceplate onto the strike and secure to the frame. NOTE: To avoid pinching, ensure wires run through wiring channel before inserting strike into frame (Fig. 2).
Step 6: Test the door to ensure that the latch depresses the LM lever. If the latch doesn't depress the LM lever, the ribs must be trimmed with side cutters (Fig. 3).

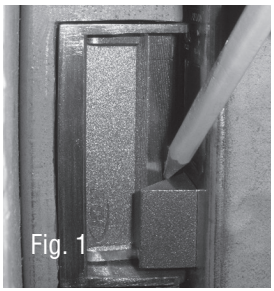

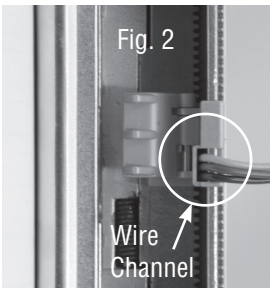

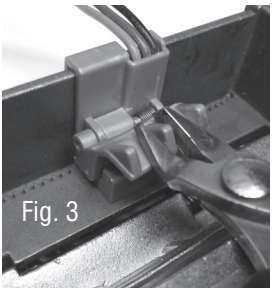

PCN15041
R08/15GR

© 2015 RUTHERFORD CONTROLS INT'L | A DORMA GROUP COMPANY

WWW.RUTHERFORDCONTROLS.COM • PHONE: 1.800.265.6630 • FAX: 1.800.482.9795 • E-MAIL: SALES@RUTHERFORDCONTROLS.COM