PREPPING FRAME INSTRUCTIONS

F2-199S/F2-299S

2 SERIES 9" FACEPLATES

RUTHERFORD CONTROLS
A DORMA Group Company

In or Out... we make it Easy!

Frame Prep Instruction

1. Mark vertical DOOR CENTERLINE on Frame: Measure door thickness and mark a line equal to half the door thickness from door stop as indicated in the drawing.

2. Mark horizontal STRIKE CENTERLINE on Frame:

   2a. For CYLINDRICAL locksets, strike centerline is same as lockset centerline.

   2b. For MORTISE locksets, typically the strike center line is 3/8" above lockset centerline. Mark a line and place the strike with its center aligned to the marked centerline to make sure that locking components of the lockset (latch, deadlatch and deadbolt) fall within strike cavity before cutting frame. If all locking components of the lockset do not fall inside the strike cavity, adjust strike centerline accordingly.

3. Follow dimensions of drawing to make frame cutout.

4. If required (for hollow metal frames), use mounting tabs as frame prep instructions ISF2_Prep.

5. Follow installation sheet ISF2 for strike installation.

WARNING: The fire and security ratings shown on the strike labels no longer apply with the use of this faceplate.

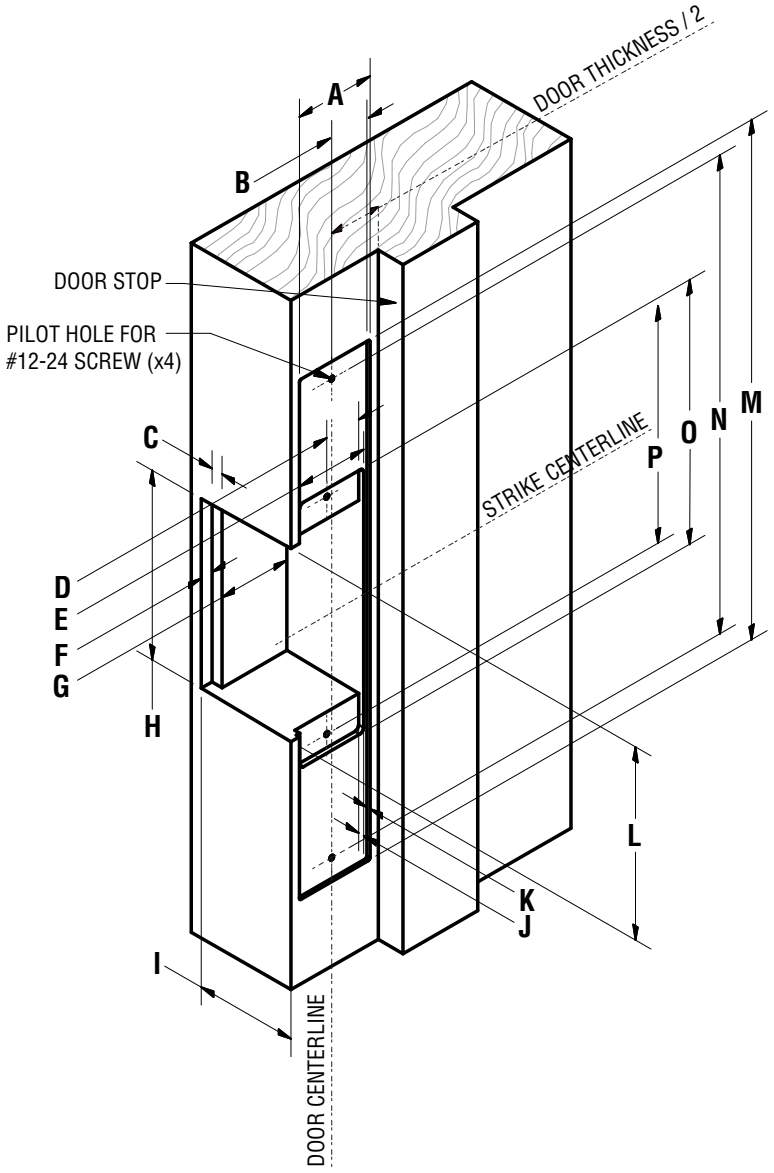

Frame Prep Dimensions																
	A	**B**	**C**	**D**	**E**	**F**	**G**	**H**	**I**	**J**	**K**	**L**	**M**	**N**	**O**	**P**
FRACTIONAL INCHES	1-13/32	23/32	3/16	21/32	1-9/32	7/32	1-5/16	3-5/16	1-13/16	3/32	1/16	3-3/8	9-1/16	8-11/32	4-19/32	4-1/8
DECIMAL INCHES	1.42	0.71	0.20	0.64	1.28	0.22	1.30	3.30	1.80	0.10	0.06	3.36	9.06	8.34	4.61	4.13
METRIC (mm)	36.0	18.0	5.0	16.3	32.6	5.5	33.0	83.8	45.7	2.5	1.5	85.4	230.0	211.8	117.0	105.0

©2013 RUTHERFORD CONTROLS • WWW.RUTHERFORDCONTROLS.COM
USA: 2517 SQUADRON COURT, SUITE 104, VIRGINIA BEACH, VA 23453 • CANADA: 210 SHEARSON CRESCENT, CAMBRIDGE, ON N1T 1J6
PHONE • 1.800.265.6630 • 519.621.7651 • FAX: 1.800.482.9795 • 519.621.7939 • E-MAIL: SALES@RUTHERFORDCONTROLS.COM

PCN13019
R04/13CM-4