INSTALLATION

F1114

FIRE LABELED HEAVY-DUTY ELECTRIC STRIKE

RUTHERFORD CONTROLS
A DORMA Group Company

In or Out... we make it Easy!®

INSTRUCTIONS

1. To determine if the Strike Shim positions need adjustment, measure dimension "R" (see Figure 1) from the center to the edge of the latch. When necessary rearrange Strike Shims according to the chart below. The "shipped as default" positions are illustrated in Figure 2.

Shim Placement Chart

Note: Shims consist of two thin and one thick. Install with the indicated hardware per the appropriate measurement R range.

Measurement "R"	"S1" Shims	"S1" Screws	"S2" Shims	"S2" Screws	
5/16" (8.2mm) or Less	None	M4 x 10mm	1 thick, 2 thin	M4 x 10mm	
5/16" - 3/8", (8.2 - 9.7mm)	1 thin	M4 x 10mm	1 thick, 1 thin	M4 x 10mm	Shipped as Default
3/8" - 7/16", (9.7 - 10.7mm)	1 thick	M4 x 10mm	2 thin	M4 x 10mm	
7/16" - 1/2", (10.7 - 12.2mm)	1 thick, 1 thin	M4 x 14mm	1 thin	M4 x 10mm	
1/2" - 9/16" (12.2 - 13.7mm)	1 thick, 2 thin	M4 x 14mm	none	none	

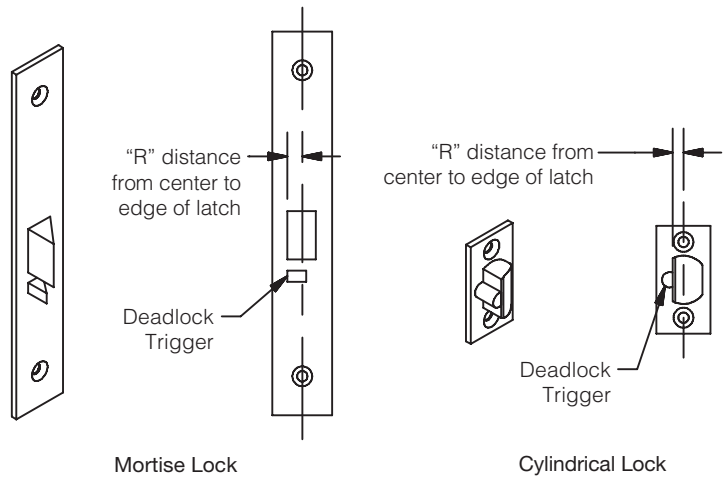

Fig. 1

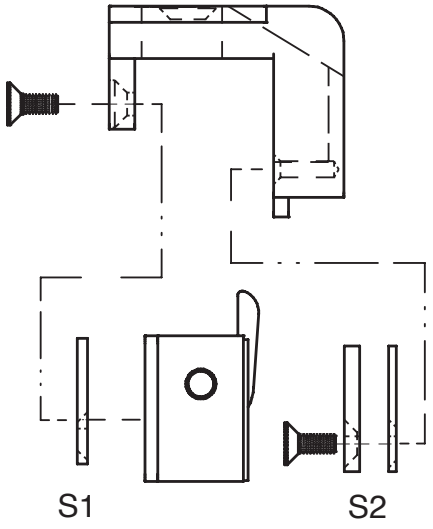

Fig. 2

When installing an electric strike on an inactive door of a set of double doors, it can be treated the same as a frame installation in most situations. For more information contact the Technical Service Department at 1-800-265-6630 or 519-621-7651.

©2013 RUTHERFORD CONTROLS • WWW.RUTHERFORDCONTROLS.COM
USA: 2517 SQUADRON COURT, SUITE 104, VIRGINIA BEACH, VA 23453 • CANADA: 210 SHEARSON CRESCENT, CAMBRIDGE, ON N1T 1J6
PHONE • 1.800.265.6630 • 519.621.7651 • FAX: 1.800.482.9795 • 519.621.7939 • E-MAIL: SALES@RUTHERFORDCONTROLS.COM

PCN13064
R11/13CA-1

FIRE LABELED HEAVY-DUTY ELECTRIC STRIKE

RUTHERFORD CONTROLS
A DORMA Group Company

In or Out... we make it Easy!®

INSTRUCTIONS Cont'd.

2. Determine the horizontal centerline.
   FOR MORTISE LOCKS: Position the strike against the edge of the door with the deadlock trigger fully on the strike's angled ramp and the latch within the strike cavity. Move door close to the frame. The horizontal centerline is clearly molded into the strike's pry-guard. Transfer onto door frame.
   FOR CYLINDRICAL LOCKS: Simply align the center of the latch with the center of the strike cavity. Move door close to the frame. The horizontal centerline is clearly molded into the strike's pry-guard. Transfer onto door frame.
3. Determine the vertical centerline of the door lock face, carefully considering any stops or gasket and transfer onto the door frame.
4. Use the vertical and horizontal centerlines marked on the drawing below to prepare the door frame for cutting.
5. If required, install the optional "no weld" mounting brackets.
6. Connect the incoming wiring from the power supply to the terminal screws on the strike insert. RCI door strikes are not polarity sensitive although be certain to observe proper polarity if a suppression diode is required for access control applications.
7. Install the door strike in the door frame using the screws provided.
8. See Installation Tips on page 3.

F1114

MEASUREMENT	FRACTIONAL INCHES	DECIMAL INCHES	METRIC mm
A	1-1/4"	1.25	31.8
B	4-7/8"	4.87	123.8
C	3-3/8"	3.38	85.7
D	1-1/2"	1.50	38.1
E	3/8"	0.38	9.5
F	1/8"	0.13	3.2
G	1-11/16"	1.69	42.9
X	Vertical Centre Line of Door Lock and Mounting Face Plate		
K	4-1/8"	4.13	104.8
M	12-24	N/A	N/A

Fig. 3

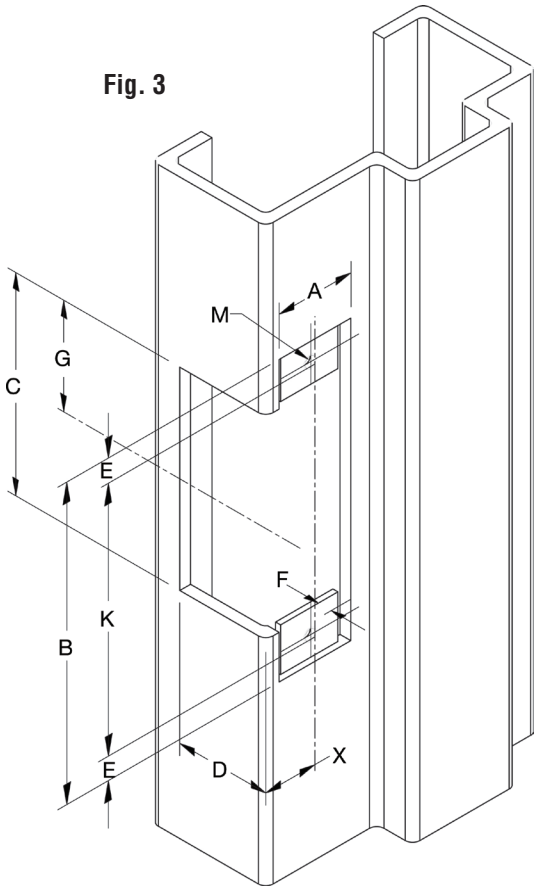

NOTE: Specifications subject to change without notice.
* **Dimension F** is measured from face of mounting tab to face of frame.

©2013 RUTHERFORD CONTROLS • WWW.RUTHERFORDCONTROLS.COM
USA: 2517 SQUADRON COURT, SUITE 104, VIRGINIA BEACH, VA 23453 • CANADA: 210 SHEARSON CRESCENT, CAMBRIDGE, ON N1T 1J6
PHONE • 1.800.265.6630 • 519.621.7651 • FAX: 1.800.482.9795 • 519.621.7939 • E-MAIL: SALES@RUTHERFORDCONTROLS.COM

RUTHERFORD CONTROLS
A DORMA Group Company

In or Out... we make it Easy!®

Installation Sequence Tips

These photos show three simple steps to a quick and easy strike insertion.



Frame Preparation:
Should the frame not be cut out for the F1114, follow the directions located in Fig 3 on Page 2.



Initial Position:
Place the strike as shown with the mounting tab located between the face plate and the insert.

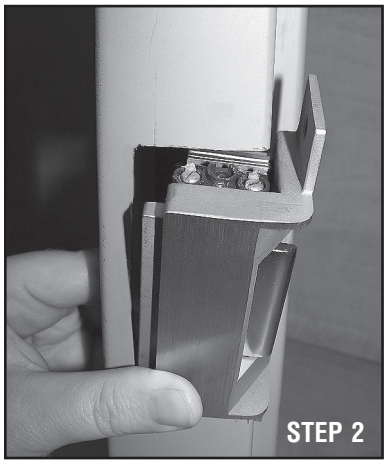

Strike Position:
Rotate the strike into the frame. Note that the strike is angled slightly forward to clear the Pry-Guard.



Final Push:
Push the strike into the frame. The pry-guard should be behind the front lip of the frame.



Ready to Secure:
The strike is now in position ready to be secured by the two (2) 12-24 mounting screws.

©2013 RUTHERFORD CONTROLS • WWW.RUTHERFORDCONTROLS.COM
USA: 2517 SQUADRON COURT, SUITE 104, VIRGINIA BEACH, VA 23453 • CANADA: 210 SHEARSON CRESCENT, CAMBRIDGE, ON N1T 1J6
PHONE • 1.800.265.6630 • 519.621.7651 • FAX: 1.800.482.9795 • 519.621.7939 • E-MAIL: SALES@RUTHERFORDCONTROLS.COM

INSTALLATION

Mounting Bracket Kit for Electric Strikes

RUTHERFORD CONTROLS
A DORMA Group Company

In or Out... we make it Easy!®

Instructions

Mounting bracket kit is for use with aluminum and steel frames that do not have factory installed mounting tabs for electric strike installation.

1. Prepare the frame as shown in the installation instructions (shipped separately with corresponding products). Fasten the mounting bracket to the faceplate of the strike, selecting the appropriate shims for your installation.
2. Using the assembled strike and brackets as a template, place against the frame and mark the mounting hole locations. Remove and drill a 3/16" hole in frame for each mounting bracket and countersink the frame.
3. Remove the brackets from the faceplate and install in the frame using the 12-24 x 3/8" machine screws supplied. Tabs are zinc plated and drilled and tapped for this purpose.
4. Make final electrical connections as described in installation instructions (separate) and mount strike to the brackets with the 12-24 x 3/8" machine screws.

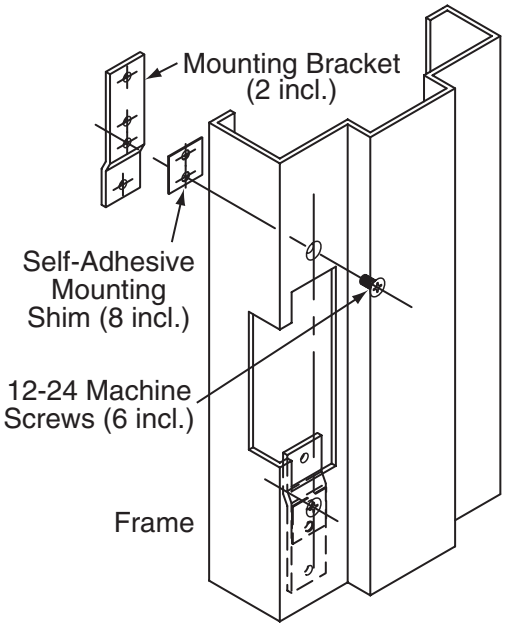

©2013 RUTHERFORD CONTROLS • WWW.RUTHERFORDCONTROLS.COM
USA: 2517 SQUADRON COURT, SUITE 104, VIRGINIA BEACH, VA 23453 • CANADA: 210 SHEARSON CRESCENT, CAMBRIDGE, ON N1T 1J6
PHONE • 1.800.265.6630 • 519.621.7651 • FAX: 1.800.482.9795 • 519.621.7939 • E-MAIL: SALES@RUTHERFORDCONTROLS.COM