INSTALLATION

AH10 / AH20

Armature Holder Accessory

For 8310 / 8320 Electromagnetic Locks

RUTHERFORD CONTROLS
A DORMA Group Company

In or Out... we make it Easy!®

Instructions

Read the Pre-Installation instructions provided with your RCI Electromagnetic Lock.
Conformance is important.

This accessory provides secure surface mounting when it is not possible to secure the armature mounting bolt through the door.

Each armature holder is fastened to the door with the 8 TEK™ screws provided.
The armature bolt is positioned through the plate and 3 washers.
Thread locking compound is carefully applied to the exposed thread.
The bolt then threads into the armature holder.

NOTE: The 13/32" (10mm) thickness of the armature plate holder must be considered when drilling the frame head to mount the electromagnetic lock

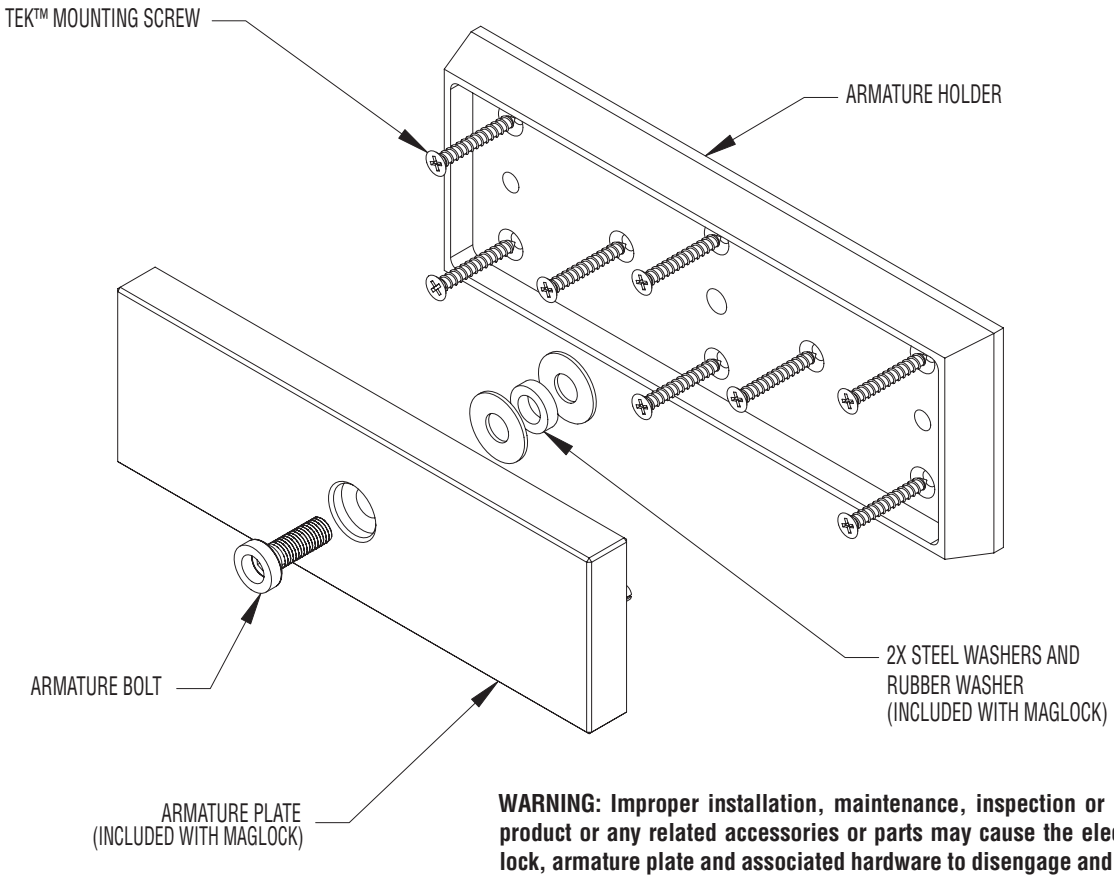

WARNING: Improper installation, maintenance, inspection or usage of the product or any related accessories or parts may cause the electromagnetic lock, armature plate and associated hardware to disengage and fall, causing serious bodily injury and property damage. Rutherford Controls Int'l Inc. and/or Rutherford Controls Int'l Corp. will not be liable to the installer, purchaser, end user or anyone else for damage or injury to person or property due to improper installation, care, storage, handling, maintenance, inspection, abuse, misuse or act of God or nature involving this product or any related accessories or parts.

NOTE: Not to scale. Specifications are subject to change without notice.

© 2016 RUTHERFORD CONTROLS INT'L | A DORMA GROUP COMPANY
WWW.RUTHERFORDCONTROLS.COM • PHONE: 1.800.265.6630 • FAX: 1.800.482.9795 • E-MAIL: SALES@RUTHERFORDCONTROLS.COM

PCN15029
R05/16TG