INSTALLATION 9321/23

Easy Read-Prox® Reader

RUTHERFORD CONTROLS

In or Out...we make it Easy!®

Where to install proximity readers

Low to high traffic doors
Interior or exterior doors
Narrow door frames
Inside walls
Architecturally sensitive installations

Where NOT to install proximity readers

Behind metal – RF will not penetrate
On a ferrous metal surface – diminishes read range
Near TVs or monitors – RF will interfere with reader

NOTE: READER IS WEATHER RESISTANT. **Do not apply sealant or gaskets to the back of the reader**, as this may cause condensation build up and adversely affect reader operation.

Mounting Instructions

9321 Slimline

1. Select appropriate space on wall for reader installation. Ensure that there are no hidden electrical hazards prior to drilling.
2. Drill hole for reader wiring to pass through.
3. Remove changeable cover from reader if necessary. Cover is removed by prying off from the bottom of cover only.
4. Pass the readers 8 wires through hole.
5. Hold reader against wall with LED's at bottom, mark position of three mounting holes.
6. Drill the three mounting holes as appropriate for the type of fasteners being used.
7. Install / level the reader and secure with three mounting screws.
8. Install removable cover by engaging top tab and pivoting cover down over reader. Cover should snap in place when installed properly.
9. Cover is secured with single screw (provided) on lower edge of cover.
   Important: Cover screw must not be longer than 1/4" or internal damage will result, voiding warranty.

9323 Micro

1. Select appropriate space on wall for reader installation. Ensure that there are no hidden electrical hazards prior to drilling.
2. Holding reader back plate against wall, mark position for two screw holes and center hole for reader.
3. Drill center hole 13/16" (7/8" max) in diameter. If wall is not hollow, ensure depth of the hole is at least 2-3/4" deep to prevent damaging reader/wiring.
4. Drill two smaller mounting holes as appropriate for type of fastener being used.
5. If necessary, drill hole through wall for wiring to pass through.
6. Screw back plate onto reader until flush with front of reader.
7. Pass reader wires through hole and out other side as appropriate.
8. Insert reader into hole being careful not to damage wiring. Secure back plate with two screws provided.
9. Snap the appropriate colored cap over the back plate by engaging one side and press the other side until it snaps securely in place.

Fig. 1

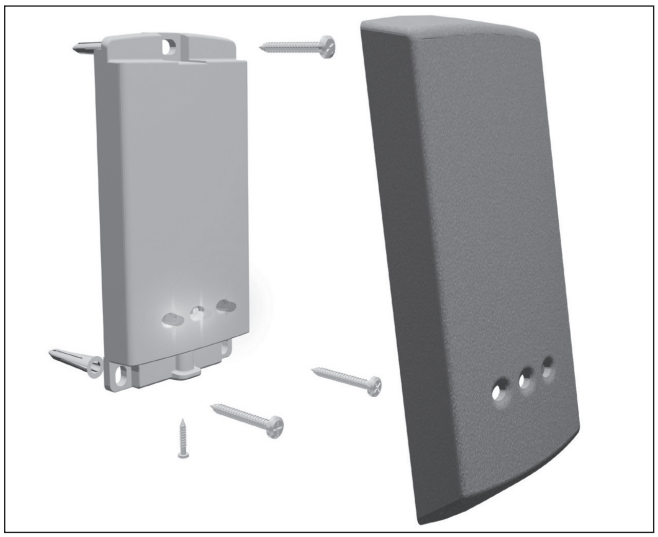

Fig. 2

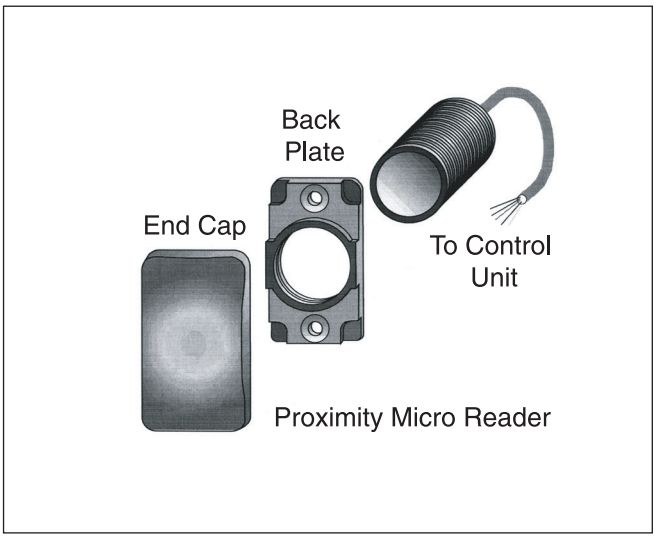

© 2016 RUTHERFORD CONTROLS INT'L
WWW.RUTHERFORDCONTROLS.COM • PHONE: 1.800.265.6630 • FAX: 1.800.482.9795 • E-MAIL: SALES@RUTHERFORDCONTROLS.COM
PCN16045
R09/16TG

Fig. 3

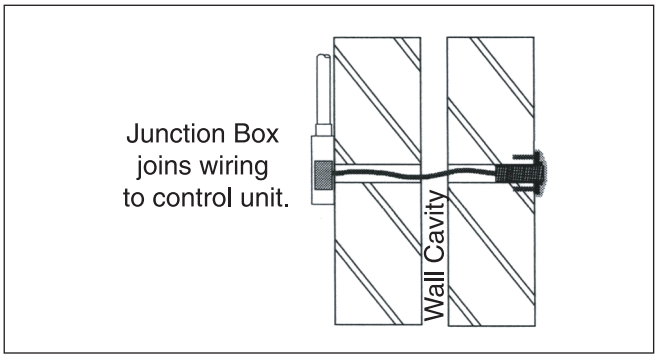

Micro reader surface mounted onto wall using back plate. The plastic end cap is placed over the exposed end of the reader.

Fig. 4

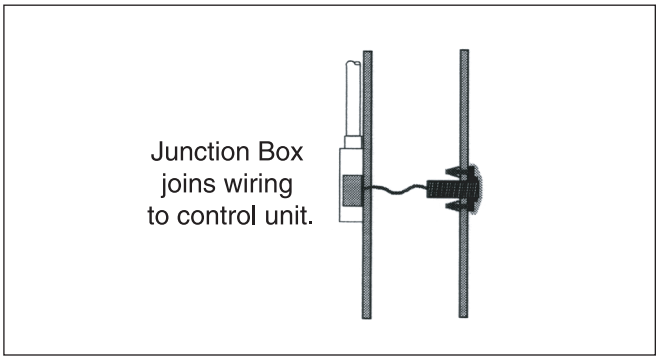

Micro reader surface mounted onto a hollow wall using the back plate. The plastic end cap is placed over the base plate.

Electrical Installation Instructions

1. The reader comes with 16 feet of non-shielded cable. The type of cable used to extend the distance will affect the maximum distance the reader can be extended.

   Switch 2 control board to reader – Maximum cable run = 300 feet (100 m)

2. The micro reader will be sent out with a RJ45 connector on it. This can be cut off and the cable stripped back ready for wiring.
3. Mount Switch 2 control board into power supply cabinet with stand-offs supplied.
4. Connect reader to control board as shown in Fig. 5. If additional reader is required for in/out operation, wire the reader in parallel.
5. Reader operates on 12VDC only. Connect reader to power transformer and electric lock as shown in Fig. 6 or Fig. 7.

Note: Unit requires a filtered and regulated power source for proper operation. See our line of power supplies and transformers for options to use.

Proximity Slimline Reader Wiring Diagram **Proximity Micro Reader Wiring Diagram**

Fig. 5

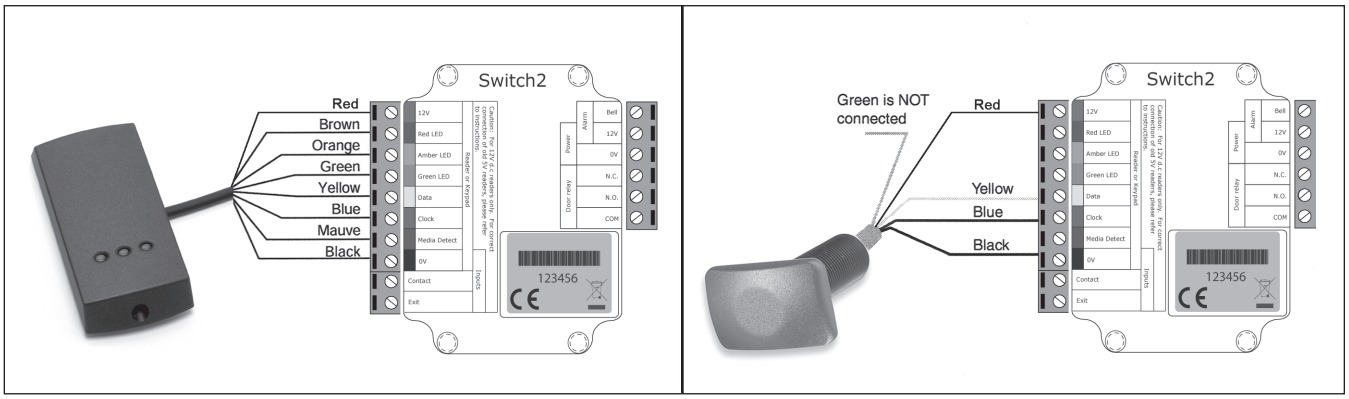

© 2016 RUTHERFORD CONTROLS INT'L

Fig. 6

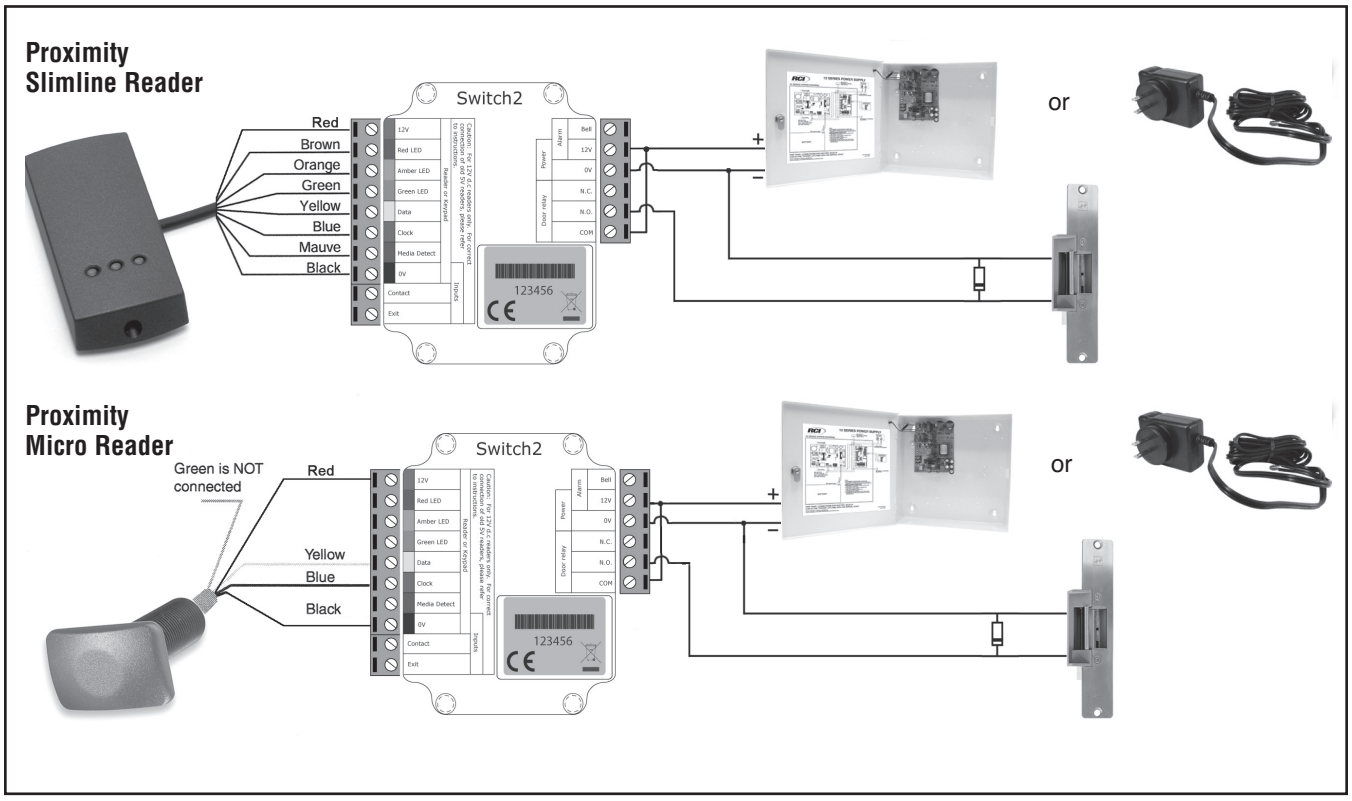

Fig. 7

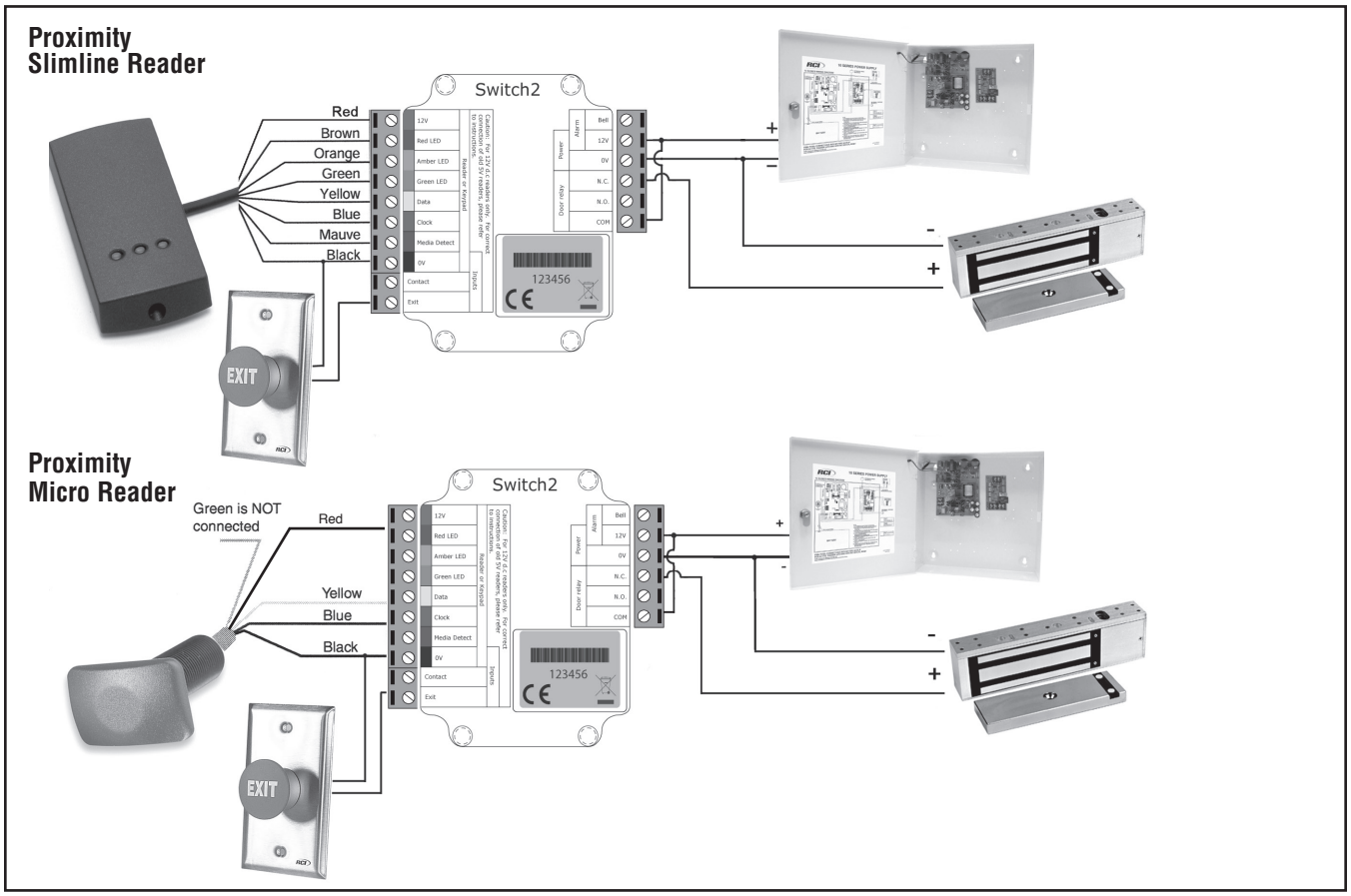

© 2016 RUTHERFORD CONTROLS INT'L

Programming Instructions

The reader operates with a Wallet of cards which contains: an Enrollment Card, Fail Open Release Card, Silent Operation Card, Door Open Card, 10 Deletion Cards and 10 User Tokens (Cards or Fobs). Card/Fob packs are sold separately.

Initializing the Reader

1. When reader is powered for the first time, it must be initialized.
2. Until initialized, the LED's (9321only) will be flashing on and off. The sounder (9323 only) will beep 3 times per second.
3. Take Enrolment Card you wish to enroll from Wallet.
4. Present the Enrolment Card to reader(s).
5. The LED's (9321only) stops flashing. The (9323 only) stops beeping.
6. All cards in Wallet are now valid; as such Wallet with programming cards and user cards must be stored in secure location to maintain proper building security.

Issuing Tokens

1. On each page of Wallet, there are 2 'pairs' of opposing cards.
   A 'User Card' and a corresponding 'Deletion Card'.
   Do not mix up these pairs.
2. Write users name on the Deletion Card.
3. Take corresponding User Card from opposing pouch and issue to user.

Deleting a User (Barring)

1. When token (card or fob) becomes lost or stolen, it is important to delete missing token from your system to avoid unauthorized access.
2. To delete user, take their corresponding Deletion Card from Wallet.
3. Present Deletion Card to reader(s). This will remove lost token (card or fob) from accessing your building.
4. Should deleted user token (card or fob) becomes found, system administrator can re-enroll token. See "To Re-Enroll a Deleted User" below.

To Re-Enroll a Deleted User

1. System administrator can re-validate token (card or fob).
2. Present Enrolment Card to reader(s).
3. Present user's deleted token (card or fob) to reader(s).
4. User's token (card or fob) will now be valid again.

Setting "Door Open" Time

1. Take Door Open Time function card from the Wallet.
2. Present card to reader(s). Reader will begin beeping once per second.
3. Wait for desired period of time you wish door to remain unlocked.
4. Present Door Open function card again at end of that period to set unlock time. Beeping will stop.

Silent Operation Card

1. Take Silent Operation function card from Wallet.
2. Present card to reader(s). Reader will beep.
3. Switch 2 control unit is now in silent operation mode.
4. Present card again to disable silent operation mode. Reader will beep.

To Enroll another Card Pack

1. Additional Card Pack(s) may be added as needed.
2. To enroll an additional Card Pack, first present the Enrolment Card from any currently enrolled Card Pack to reader.
3. Follow this by presenting the Enrollment Card from new Card Pack.
4. New Card Pack is now enrolled.

Hardwire Reset Instructions

The proximity reader will remember its settings and details of card validity in the event of a power failure. A data reset may be carried out to return the unit to its factory settings. The procedure for doing this is as follows:

1. Turn off the power to the control board.
2. Disconnect the Green and Mauve wires from the Prox Reader at the Switch 2 control unit (9321only).
3. Insert a wire jumper between the Green and Mauve terminals (not supplied).
4. Turn on power and switch 2 control unit. It will beep four times.
5. Turn off the power and remove the wire jumper.
6. Reconnect the Green and Mauve wires to their appropriate terminals (9321 only).
7. Re-apply power. The reader has now been reverted back to factory settings.
   "Door Open" time = 7 seconds / no tokens valid

Troubleshooting

Door Open Time (DOT) card not accepted by reader	- Present the enrollment card to the reader - Present the DOT card to the reader - DOT card should now be accepted
Tokens (Cards or fobs) not being accepted by the reader	- Present the enrollment card to the reader - Present the token to the reader - Tokens should now be accepted
Second wallet (enrollment card) not being accepted by the reader	- Additional wallets can only be added to the reader by first presenting any one of the currently enrolled enrollment card(s) followed by the new wallet enrollment card(s)

© 2016 RUTHERFORD CONTROLS INT'L
WWW.RUTHERFORDCONTROLS.COM • PHONE: 1.800.265.6630 • FAX: 1.800.482.9795 • E-MAIL: SALES@RUTHERFORDCONTROLS.COM