INSTALLATION

9212iLW

Interior/Exterior Use Stand-Alone Keypad

RUTHERFORD CONTROLS
A DORMA Group Company

In or Out... we make it Easy!®

Features:

- Flush Mount, Single Gang
- Illuminated Backlit Keys
- Keypad Programmable
- Keypress Feedback via Built-In Sounder
- Bi-Color Red/Green LED Indicates Relay Status
- Yellow LED Indicates Program Mode
- 120 Users
- Single Use Codes
- Lockout Users
- Passage/Toggle Codes
- 10 to 30 Volt DC Operation
- 12 to 24 Volt AC Operation
- 2 Amp Main Relay
- Remote Trigger Input (REX)
- 2 Year Warranty

Product Description:

The 212iLW keypad features a single-relay output to control any device requiring an on/off switch. The output is timed or latched and operated by a user's PIN code. Additionally, the 212iLW keypad provides basic keyless entry by controlling a door locking device where security is not an issue.

The 212iLW style keypads are designed for both indoor and outdoor flush mount applications. The electronics are conformal coated in the manufacturing process in order to provide this level of application flexibility. In addition, each keypad uses hardened keys to assure long-term, high-quality performance.

Each keypad contains illuminated clear keys that make operation in low light situations easy and accurate. iLW style keypads mount to any standard single-gang electrical box or directly to any wall.

Specifications:

Parameter	Range/Description
Voltage	10–30 VDC, 12-24VAC (Auto-Adjusting)
Current	93mA @ 10VDC; 158mA @ 30VDC, 148mA @ 12VAC; 198mA @ 24VAC
Environment	For Indoor and Outdoor Use
Temperature Tolerance	-20° F to 130° F (-28° C to 54° C)
Dimensions	5 1/8" H x 3 3/8" W x 5/8" D
Main Relay (Form C)	Contact Rating: 2A @ 30VAC/DC
REX Input	Normally Open Dry Contact
Door Position Input	Normally Closed Dry Contact
LEDs	Bi-Color Red/Green; Yellow
Default Keypad Settings	
Parameter	Default Setting
Master Code	1234
Lock Output	Relay 1 (Main relay)
Audio Alerts	Not assigned
REX	Triggers Lock Output
REX Operation	Always Triggers (regardless of Door Loop)
Error Lockout / Threshold	Enabled / 3 Attempts
Error Lockout Duration	10 seconds
Lock Output Time	5 seconds
Visual / Audio Keypress Feedback	Enabled
Auto-Entry	Disabled
User Lockout	Enabled

©2013 RUTHERFORD CONTROLS • WWW.RUTHERFORDCONTROLS.COM
USA: 2517 SQUADRON COURT, SUITE 104, VIRGINIA BEACH, VA 23453 • CANADA: 210 SHEARSON CRESCENT, CAMBRIDGE, ON N1T 1J6
PHONE • 1.800.265.6630 • 519.621.7651 • FAX: 1.800.482.9795 • 519.621.7939 • E-MAIL: SALES@RUTHERFORDCONTROLS.COM

MOUNTING

The keypad is designed to be flush mounted using a standard single gang electrical box. In addition, it can be flush mounted directly to the wall surface by cutting a hole in the wall. To properly size the mounting and wire access hole, use the installation template on the last page in this manual.

Mounting height can vary depending on requirements. An appropriate range is typically between 48 and 52 inches on center off the floor.

For outdoor installations, use a weatherproof back box and seal the wire entry locations with silicone and provide a drain hole. In addition, use the anti-oxidant grease pack for the wire harness connectors.

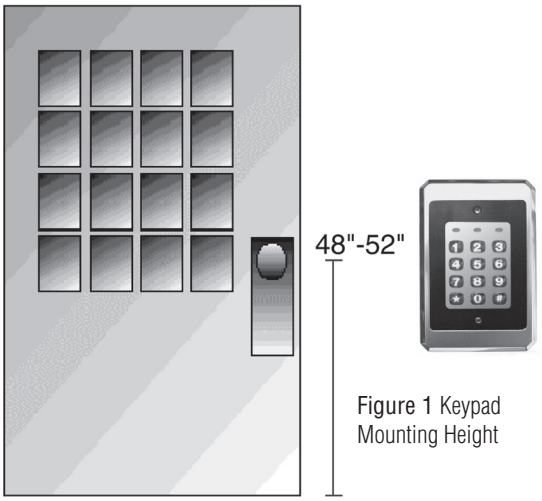

Figure 1 Keypad Mounting Height

WIRING : Wire Harness Configuration

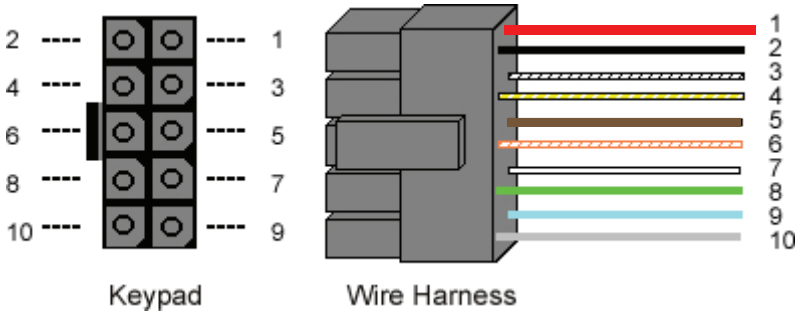

Figure 2 Keypad Connector and Wire Harness

Pin	Wire Color	Signal name
1	Red	V+ (Keypad Power)
2	Black	V- (Keypad Power)
3	White/Black	Not Used
4	White/Yellow	Not Used
5	Brown	Remote Trigger (REX)
6	White/Orange	Loop Common (REX and Door Loop)
7	White	Door Loop Monitor
8	Green	Main Relay – Normally Open
9	Blue	Main Relay - Common
10	Gray	Main Relay – Normally Closed

Wiring the Keypad to a Maglock (Fail-Safe)

Use the following steps to connect the keypad to a Maglock (Fail-Safe):

1. Connect the red wire (V+) to the blue wire (common), and then connect them to the positive on the power supply.
2. Connect the gray wire (normally closed) to the positive on the Maglock.
3. Connect the black wire (V-) to the negative on the Maglock, and then connect them to the negative on the power supply.

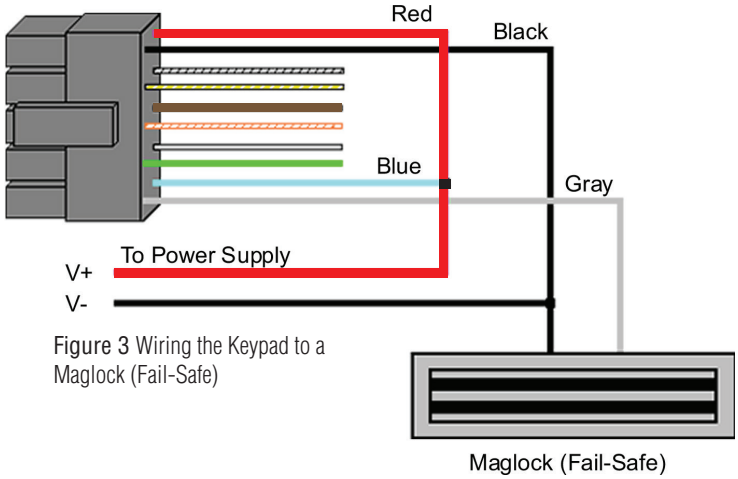

Figure 3 Wiring the Keypad to a Maglock (Fail-Safe)

Figure 4 Wiring the Keypad to an Electric Strike (Fail-Secure)

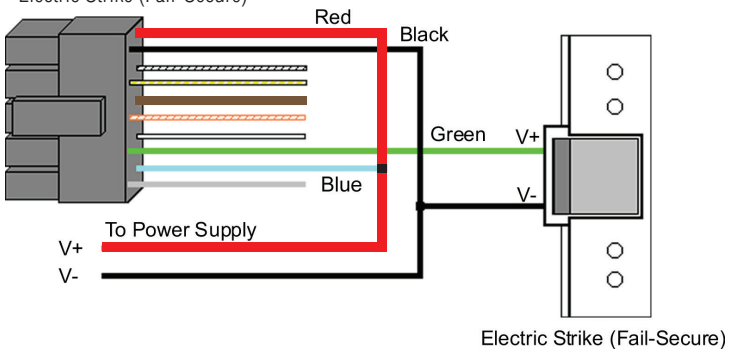

Wiring the Keypad to an Electric Strike (Fail-Secure)

Use the following steps to connect the keypad to an electric strike (fail-secure) (see Figure 4 for reference):

1. Connect the red wire (V+) to the blue wire (common), and then connect them to the positive on the power supply.
2. Connect the green wire (normally open) to the positive on the strike.
3. Connect the black wire (V-) to the negative on the strike, and then connect them to the negative on the power supply.

©2013 RUTHERFORD CONTROLS • WWW.RUTHERFORDCONTROLS.COM
USA: 2517 SQUADRON COURT, SUITE 104, VIRGINIA BEACH, VA 23453 • CANADA: 210 SHEARSON CRESCENT, CAMBRIDGE, ON N1T 1J6
PHONE • 1.800.265.6630 • 519.621.7651 • FAX: 1.800.482.9795 • 519.621.7939 • E-MAIL: SALES@RUTHERFORDCONTROLS.COM

Shunting a Normally Closed Zone

Use the following steps to use the keypad to shunt a normally closed zone:

1. Connect the blue wire (common) to the common connection on the door position switch.
2. Connect the green wire (normally open) to the normally closed connection on the door position switch.

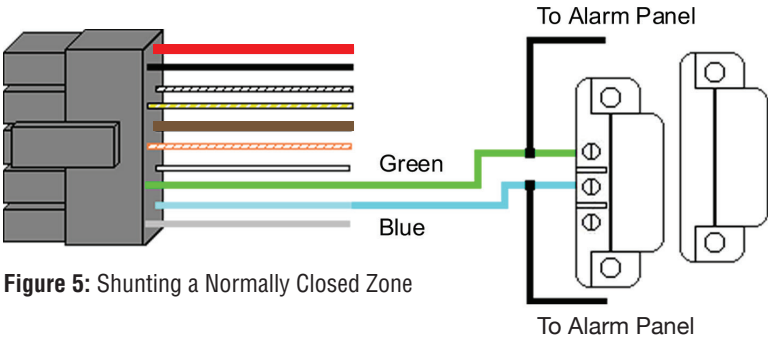

Figure 5: Shunting a Normally Closed Zone

Wiring Remote Trigger as Request to Exit (REX) Button and Door Contacts

Use the following steps to connect the keypad to a normally open REX device and normally closed door switch:

1. Connect the brown wire (REX Input) to the normally open connection on the REX device.
2. Connect the white/orange (loop common) to the common on the REX device and the common on the door switch.
3. Connect the white wire (door loop) to the normally closed connection on the door switch.

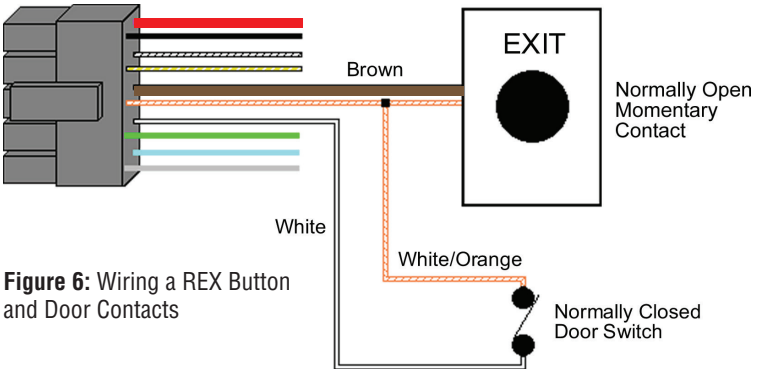

Figure 6: Wiring a REX Button and Door Contacts

NOTE: Door loop doesn't need to be closed for the REX function to operate, by default, but setting option 8 to 0 under command 30, programs the REX function to operate only when the door loop is closed. This prevents the REX from re-triggering when the door is open

TESTING THE KEYPAD

After installing the keypad, RCI recommends that you perform the keypad self-test once a year, to ensure that the keypad works properly.

1. To perform the self-test, with the unit powered up, press the following keys on the keypad: 7890#123456*
   - If all 12 keypresses are accepted, the keypad enters self-test mode.
   - The LEDs alternate green, yellow, and red followed by the sounder beeping three times.
2. Verify that the master code works correctly. (The master code accesses program mode and activates the main relay to verify that the locking device is working.)

The default master code is 1234. (If the default is not working, refer to WIRE HARNESS LOOPBACK CONNECTIONS section on pg.6)

PROGRAMMING

To enter program mode, press 99 # Master Code *. The yellow LED must then start blinking slowing (if not verify the master code is correct – refer to WIRE HARNESS LOOPBACK CONNECTIONS section). The default Master Code is 1234.

NOTE: If auto-entry is enabled, the * (asterisk) key is not used to enter Program mode. To change the Master Code, enter:
1 # new Master Code * new Master Code * (When finished press the * to exit program mode.)
Note: Refer to PROGRAMMING USERS section on pg. 4 for adding user codes

A record of all user locations must be maintained to effectively manage keypad and maintain proper security of site. A sample form is available for download at www.rutherfordcontrols.com - Support - Keypads & Readers section.

©2013 RUTHERFORD CONTROLS • WWW.RUTHERFORDCONTROLS.COM
USA: 2517 SQUADRON COURT, SUITE 104, VIRGINIA BEACH, VA 23453 • CANADA: 210 SHEARSON CRESCENT, CAMBRIDGE, ON N1T 1J6
PHONE • 1.800.265.6630 • 519.621.7651 • FAX: 1.800.482.9795 • 519.621.7939 • E-MAIL: SALES@RUTHERFORDCONTROLS.COM

PROGRAMMING USERS

To enter program mode press 99 # master code *.

Command/Action	Keys to Enter/Details
Master Code	User #1 is the master code; it can access all commands in program mode. The default code is 1234. The master code can be programmed with 60 as a standard user only.
Supervisor Code	User #2, when programmed, is the supervisor code. The supervisor can access program mode, but is limited to adding and deleting users, as well as enabling or disabling users. The supervisor code can't change, delete, or disable the master code or supervisor code itself.
Add Standard User	(short version) user location # code * code *
Add User with Specific Unlock Time	unlock time # user location # code * code * (This command is used to program a user with a specific unlock time. This user activates the virtual lock output.)
Delete User	user location # * *
Command 60. Add/Modify Enhanced User	60 # user type # user location # code * code * (codes can be from 1 to 10 digits in length)
	User Types 0 – Toggle User 1 – Standard User 3 – Lockout User 5 – Single Use Code 7 – Emergency User 8 – Duress User 9 – Two-Part User Type A 10 – Two-Part User Type B
Toggle User	A toggle user latches the virtual lock output.
Standard User	Activates the virtual lock output using the lock duration programmed with command 11.
Lockout User	This user type locks out users in user locations higher than the lockout user when the lockout user code is entered. For example, if the lockout user is programmed for user 20, any user in location 21 to 120 is locked out and their codes no longer work to gain access. A lockout is removed by entering the same lockout code. If another lockout code in another user location is entered, the lockout user location level is set to the new lockout user location. The master code and emergency users can't be locked out. The current lockout is cleared when program mode is entered. "Lockout activated" is indicated by two double beeps. "Lockout canceled" is indicated by one double beep. "Access denied due to lockout" is indicated by 1 long beep followed by 3 short beeps. "User lockout" can be enabled or disabled with command 30.
Single Use Code	This code can only be entered once to gain access using the lock virtual output. Once used, this code is no longer active. A single use code can be verified by entering 5 # code *. If the code is a single use code, the green LED flashes for ½ a second. An "invalid code" is indicated by 3 quick beeps.
Emergency User	This user type is a standard user that can not be locked out by a lockout user.
Duress User	Entering a duress code activates the lock and duress virtual outputs. This allows you to trigger another device silently, such as an alarm, and still gain access in case of an emergency.
Two-Part Users A and B	When the two-part user option is enabled, two codes are required to gain access. A "Two-Part Type A" and "Two-Part Type B" user must enter their code (not necessarily in that order). After the first code is entered, the LED alternates between red and green, indicating another code is required. The second code must be entered within 15 seconds of the first code. When two codes of the same type are entered, a type mismatch is indicated by 5 beeps. When Two-Part User is disabled, all Type A and B user codes are converted to standard user codes. Two-Part users activate the virtual lock output. Two-Part Users can be enabled or disabled with command 30.
Command 56. Enable/Disable User	56 # enable/disable # user location # * *
	Options: 1 = Disable 0 = Enable The master code and supervisor code can't be disabled.

©2013 RUTHERFORD CONTROLS • WWW.RUTHERFORDCONTROLS.COM
USA: 2517 SQUADRON COURT, SUITE 104, VIRGINIA BEACH, VA 23453 • CANADA: 210 SHEARSON CRESCENT, CAMBRIDGE, ON N1T 1J6
PHONE • 1.800.265.6630 • 519.621.7651 • FAX: 1.800.482.9795 • 519.621.7939 • E-MAIL: SALES@RUTHERFORDCONTROLS.COM

PROGRAMMING KEYPAD OPTIONS

To enter program mode press 99 # master code *.

Command/Action	Keys to Enter/Details	
Command 30. Enable/Disable Keypad Options	30 # option # enable/disable # * *	
Option 0 – Audio Keypress Feedback 1 – Visual Keypress Feedback 2 – Auto Entry 3 – Error Lockout 4 – User Lockout 5 – Two-Part Users 6 – Keypad Illumination 7 – Keypad Dimming 8 – REX Operation	Disable 0 = disabled 0 = disabled **0 = disabled** 0 = disabled 0 = disabled 0 = disabled 0 = disabled 0 = disabled 0 = only when door loop closed	Enable **1 = ENABLED** **1 = ENABLED** 1 = ENABLED **1 = ENABLED** **1 = ENABLED** **1 = ENABLED** **1 = ENABLED** **1 = ENABLED** **1 = ALWAYS**
Auto Entry	When auto-entry is enabled, users with codes the same length as the master code do not have to press the * key after entering their code. If you have a code greater than the master code, you can use Auto-Entry Suspend. Just enter the # key prior to your code followed by the * key. Example: # 23456 * if the master code is four digits.	
Command 32. Change Keypad Parameters	32 # parameter # value # * *	
Parameter 0 - Duress Output Duration 1 - Panic Output Duration 2 - Error Lockout Threshold 3 - Error Lockout Duration	Value 1 - 255 (default = 5) 1 - 255 (default = 5) 1 - 50 (default = 3) 1 - 255 (default = 10)	
Error Lockout	When enabled, the keypad keeps track of the number of consecutive invalid codes entered, including attempts to access program mode. When the threshold is reached, the yellow LED turns on solid and the keypad no longer responds to key presses for the programmed time duration. The count is reset by entering a valid code, including entering program mode.	
Keypad Illumination	Keypad backlighting can be enabled or disabled.	
Keypad Dimming	When enabled, the backlighting illumination level decreases 15 seconds after the last key press. When disabled, the backlighting remains at full illumination at all times.	
Command 40. Reset Defaults Only	40 # 00000 # 00000 # ** (master code, all keypad options and parameters)	
Command 46. Erase Users and Reset Default Settings.	46 # 00000 # 00000 # **	

PROGRAMMING OPTIONS CHART - QUICK REFERENCE

To enter program mode press 99 # master code *.

Command/Action	Keys to Enter/Details
Add Standard User	user location # code * code *
Add Standard User with Specific Unlock Time	unlock time # user location # code * code *
Add/Modify Enhanced User	60 # user type # user location # code * code *(refer to PROGRAMMING USERS section on pg.4 for details)
Delete User	user location # **
Set LOCK Output Time Duration	11 # time # 0 # ** (1 to 255 seconds)
Enable/Disable Keypad Options	30 # option # enable/disable # ** (refer to PROGRAMMING KEYPAD OPTIONS section on pg.5 for details)
Enable/Disable User	56 # enable/disable # user location # **
Reset Defaults Only	40 # 00000 # 00000 # **
Erase Users and Reset Default Settings	46 # 00000 # 00000 # **

©2013 RUTHERFORD CONTROLS • WWW.RUTHERFORDCONTROLS.COM
USA: 2517 SQUADRON COURT, SUITE 104, VIRGINIA BEACH, VA 23453 • CANADA: 210 SHEARSON CRESCENT, CAMBRIDGE, ON N1T 1J6
PHONE • 1.800.265.6630 • 519.621.7651 • FAX: 1.800.482.9795 • 519.621.7939 • E-MAIL: SALES@RUTHERFORDCONTROLS.COM

TROUBLESHOOTING

Refer to this section if the keypad is not operating correctly as described in this manual.

Problem	Solution
The LEDs are slowly cycling from right to left and backlighting is off.	The keypad is designed to monitor the input voltage and this is an indication of under-voltage. The under-voltage threshold is set to 8.5VDC, and when the voltage drops below this limit, the low voltage warning starts and backlighting is turned off. To solve, raise the voltage to between 12-24V.
The LEDs are rapidly cycling from left to right and the keypad has lost all operation.	The keypad is designed to monitor the input voltage, and this is an indication of over-voltage. The over- voltage threshold is set to 36VDC, and when the voltage rises above this limit, the over voltage warning starts and the keypad loses all operation. To solve, verify voltage is correct at power supply.
The master code does not work.	Perform the programming mode loopback and reset the master code using the programming command.
No LEDs are lit on the keypad	Power is not reaching the keypad. Using a voltmeter, confirm that there is voltage at the keypad on the red and black wires. If there is no voltage at the keypad, verify that there is voltage at the power supply. If there is no voltage at the power supply, call the manufacturer of the power supply. If there is voltage at the power supply but not at the keypad, verify there is no break in the wires, then check continuity in the whole length of the wire run. To verify that the keypad is working, you can power the keypad with a 12-Volt Battery.

If the keypad still does not work after troubleshooting, please call RCI's techinal support department at 1-800-265-6630 or 519-621-7651.

WIRE HARNESS LOOPBACK CONNECTIONS

If the Master Code is either not working or forgotten, power down the system, connect the wire harness as shown in Figure 7 below, and then power the system up again. The unit should now be in program mode. Next, change your Master Code using the programming command and power down the system and restore the wire harness to its original configuration and power the system back up.

Figure 7 Program Mode Loopback

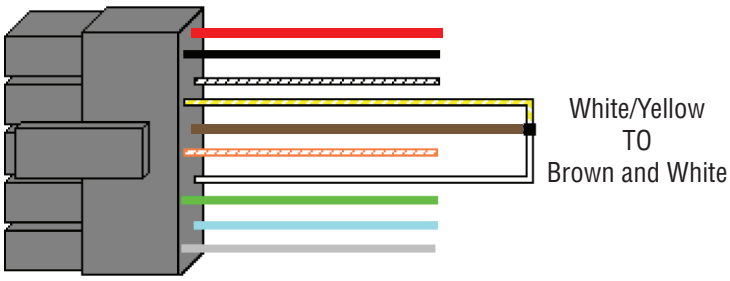

iLW-Keypad surface-mount template

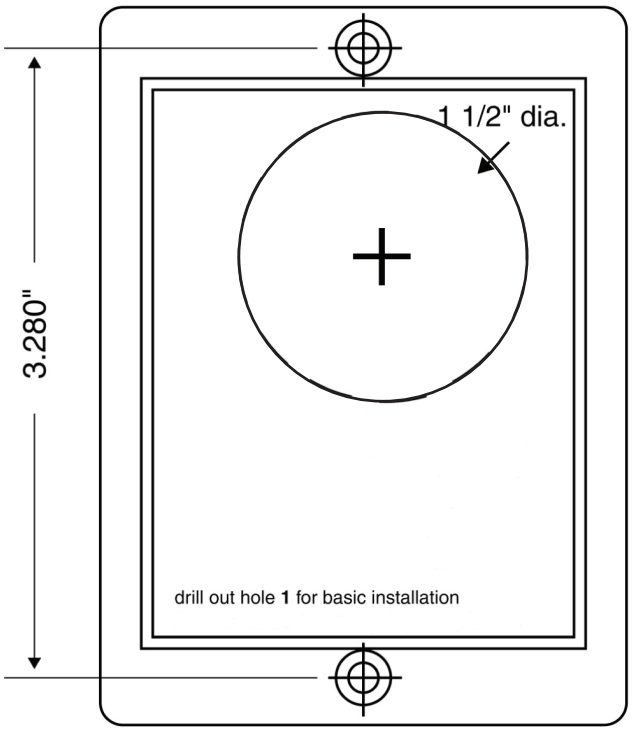

©2013 RUTHERFORD CONTROLS • WWW.RUTHERFORDCONTROLS.COM
USA: 2517 SQUADRON COURT, SUITE 104, VIRGINIA BEACH, VA 23453 • CANADA: 210 SHEARSON CRESCENT, CAMBRIDGE, ON N1T 1J6
PHONE • 1.800.265.6630 • 519.621.7651 • FAX: 1.800.482.9795 • 519.621.7939 • E-MAIL: SALES@RUTHERFORDCONTROLS.COM