INSTALLATION 9212i

Stand-Alone Keypad

RUTHERFORD CONTROLS
A DORMA Group Company

In or Out... we make it Easy!®

Instructions

Features:
- 4 Independent Outputs
- 4 Independent Timers
- All Outputs Assignable by Code
- On board 5 Amp Form C Relay
- 120 Users
- Remote Triggering Input
- Keypad Programmable

Memory
Non-volatile EEPROM memory means your codes and programming will be there whether you remove power for 5 minutes or 5 years.

Programming
All programming is accomplished entirely from the front of the keypad. LED or Sounder guidance makes programming easy, and changing codes a matter of seconds for an authorized user.

Codes
The RCI keypads allow up to 120 individual user codes to be valid. Codes may be from 1-6 digits in length and digits may be repeated. The Master Code is always assigned to user location one (1).

Main Relay
This is a 5 Amp (10 Amp surge) Form-C relay which can be toggled or timed from 1 to 90 seconds-by code.

Auxiliary Outputs
Auxiliary outputs can be individually timed from 1 to 90 seconds or act as a toggle switch, and may be triggered individually or in combination-by code. The three auxiliary outputs provide a 50mA sink to ground when activated.

Remote Triggering Input
This normally open loop that by default operates the Main Relay upon activation and can be programmed to trigger any combination of outputs. Upon a momentary closure, the selected outputs will energize for their programmed time. The main relay (if selected) will energize for the same time period as the Master Code. This feature is especially useful when controlling an electric locking device.

Keypress Feedback / Audible Keypress
The RCI keypads will acknowledge a keypress by momentarily illuminating the yellow LED. This can be turned off through programming.

Keypad Active Output
The RCI keypads can be programmed to energize a voltage output whenever a key is touched. This can be used to turn on accessories such as lights, CCTV camera, or notify a guard.

Auto-Entry
This feature is used when the need for the code not to be followed by the * key is desired. The user only needs to enter their code number and the relay will activate for the programmed relay time. To use this feature, the user codes must be the same length as the master code.

Technical Notes:
To avoid ESD (Electro-Static Discharge) from interfering with the operation of the RCI keypad, ground the negative terminal of the keypad to earth ground. If the power supply can not be grounded, then the case should be grounded. For 24VDC operation, remove jumper J2 (see Fig. 5).

Packing Checklist:
9212i Keypad
Ten (10) Conductor Wiring Harness (1)
Slotted Screws (2)
Security Screws (2)
Installation
Diode (1)

Voltage	Current Rating	Temperature	Output
12-24 VAC/VDC	@ 12VDC 8mA typ – 35mA w/ relay energized @ 24VDC 16mA typ – 45mA w/ relay energized	-20°F to 130°F (-28°C to 54°C)	Main relay: 5A; form-C @24VDC; 10A surge Outputs 2-4 are 50mA neg voltage outputs

NOTE: As with any electronic product, the 9212i may be subject to irregularities in the AC power line. This can cause malfunction or unstable operation. Connecting the 9212i to a suitable DC power supply will limit the effects of AC fluctuation on the keypad.

©2013 RUTHERFORD CONTROLS • WWW.RUTHERFORDCONTROLS.COM
USA: 2517 SQUADRON COURT, SUITE 104, VIRGINIA BEACH, VA 23453 • CANADA: 210 SHEARSON CRESCENT, CAMBRIDGE, ON N1T 1J6
PHONE • 1.800.265.6630 • 519.621.7651 • FAX: 1.800.482.9795 • 519.621.7939 • E-MAIL: SALES@RUTHERFORDCONTROLS.COM
PCN13031
R04/13CA

Testing the 9212i Keypad

1. Connect the positive (+) lead of your power supply to the terminal strip (TS1) +V input.
2. Connect the negative (-) lead of your power supply to the terminal strip (TS1) -V input.
3. Turn on your power supply.
4. Press 7890#123456*. If all 12 keypresses have been verified, the keypad will enter self test mode. The yellow LED will flash three times, then light or sound continuously for 3 seconds. If these responses do not happen, try the test mode again and then call tech support. Note: self test mode can be used when troubleshooting a keypad in the field. If you do not get the continuous light then the memory has been corrupt and should be re-programmed with the 46 command (see option #18).
5. Enter the master code of 1234*. The relay will energize. Refer to programming section to program your keypad.

Note: The 9212i keypad may be programmed in your shop or at the installation site. Programmed information is stored in non-volatile memory so it will not be lost if power is removed.

RCI Keypad Defaults

RCI keypads are designed for easy installation in a minimum amount of time. The following defaults have been factory programmed:

Master Code (user 1)	**1234***
Main Relay will energize for	**5 seconds**
Auxiliary Outputs will energize for	**5 seconds**
Panic will energize	**Output 4**
Keypad Active Output	**Off**
Remote Triggering Input will energize	**Main Relay**
Keypress Feedback	**On**
LED on when powered up	**RED**
LED on when relay is activated	**GREEN**

If defaults must be changed or additional functions are desired, please refer to the Programming Options chart after you are familiar with the Programming section.

Programming

1. Enter programming mode — Yellow LED
   Press 99 # (master code) * — Flashes slowly

2. To change master code‡
   Press 1 # (new master code) * — Flashes fast
   Repeat (new master code) * — Flashes slowly

If main relay time must be changed, substitute option 2 from Programming Options chart for step above.

3. To add/change second code
   Press 2 # (new user code) * — Flashes fast
   Repeat (new user code) * — Flashes slowly

4. To add/change third code
   Press 3 # (new user code) * — Flashes fast
   Repeat (new user code) * — Flashes slowly

5. Up to 120 codes may be added in this fashion

6. Exit programming mode
   Press * — Out

Notes:

- User location represents one location in memory where an individual code is stored. A user code is stored in it's own user location. There are 120 user locations available.
- A record of all user locations must be maintained to effectively manage keypad and maintain proper security of site. A sample form is available for download at www.rutherfordcontrols.com - Support - Keypads & Readers section.
- The master code allows access to the programming mode and activates the main relay.
- All codes must be followed by the * key.
- Codes may be from 1-6 digits in length, and digits may be repeated.
- If the master code is forgotten or does not seem to be working, momentarily push SW1 on the circuit board, (see Fig. 5 for location) to enter programming mode and follow step two from above to program a new master code.
- If the yellow LED lights solid while in programming mode an error has occurred. Press * to clear (yellow LED should flash) and start over from step 2 or 3 above.

‡The master code is always in user location 1.

©2013 RUTHERFORD CONTROLS • WWW.RUTHERFORDCONTROLS.COM
USA: 2517 SQUADRON COURT, SUITE 104, VIRGINIA BEACH, VA 23453 • CANADA: 210 SHEARSON CRESCENT, CAMBRIDGE, ON N1T 1J6
PHONE • 1.800.265.6630 • 519.621.7651 • FAX: 1.800.482.9795 • 519.621.7939 • E-MAIL: SALES@RUTHERFORDCONTROLS.COM

Programming Options Chart

If the pre-programmed default values must be changed or additional functions are desired, the following options may be programmed.

ENTER PROGRAMMING MODE[1]	**PRESS**	**99 # (MASTER CODE) ***

Each of the following options can only be changed after the keypad has been put into programming mode (above).

1. Change master code/set main relay time[2]	Press	(Relay Time) # 1 # (new code) * (repeat code) *
e.g. Master code of 4321/relay time of 10 sec	Press	10 # 1 # 4321 * 4321 *
2. Add/change user code	Press	(user location) # (new code) * (repeat code) *
3. Add/change user code with a different output time on main relay[2]	Press	(Relay Time) # (user location) # (new code) * (repeat code) *
4. Delete user codes	Press	(user location) # * *
5. Set output 2 time[2]	Press	12 # (Relay Time) # 0 # * *
6. Set output 3 time[2]	Press	13 # (Relay Time) # 0 # * *
7. Set output 4 time[2]	Press	14 # (Relay Time) # 0 # * *
8. Set outputs for Remote Triggering Input	Press	17 # (outputs: .ie. 1, 2 or 2, 3 etc.) # 0 # * * Note: 0 = no outputs
9. Set outputs for Panic[3]	Press	18 # (outputs: i.e. 1, 2 or 2, 3 etc.) # 0 # * * Note 0 = no outputs
10. Turn keypress feedback/on	Press	30 # 0 # 1 # * *
11. Turn keypress feedback/off	Press	30 # 0 # 0 # * *
12. Turn yellow LED/sounder On with relay	Press	30 # 1 # 1 # * *
13. Turn yellow LED/sounder Off with relay.	Press	30 # 1 # 0 # * *
14. Turn auto entry on	Press	30 # 2 # 1 # * *
15. Turn auto entry off	Press	30 # 2 # 0 # * *
16. Turn keypad active output on[4]	Press	43 # 0 # 99 # * *
17. Turn keypad active off	Press	43 # 0 # 00 # * *
18. Erase keypad memory/reset defaults	Press	46 # 00000 # 00000 # * *
19 . Energize selected output(s) with a user code[5]	Press	59 # (outputs: i.e. 1, 2 or 2, 3 etc.) # (user location) # (new code) * (repeat code) *
e.g. User 2; code of 4321*; energize outputs 2 & 3	Press	59 # 23 # 02# 4321 * 4321 *

Notes:

1. If the master code is forgotten or does not seem to be working, momentarily push SW1 on the circuit board, (see Fig. 5 for location) to enter programming mode and follow step two from above to program a new master code.
2. Relay time must always be represented by 2 digits. Example: 5 seconds = 05. Latching /toggle is accomplished by entering a time of 00.
3. If selected, panic will operate by pressing the * and # simultaneously. Panic operates for 1 second and is defaulted to output 4.
4. Keypad active is a negative voltage output (sink) available on terminal (or wire) marked WB (see wiring diagrams for location).
5. This feature is not available with the master code.

©2013 RUTHERFORD CONTROLS • WWW.RUTHERFORDCONTROLS.COM
USA: 2517 SQUADRON COURT, SUITE 104, VIRGINIA BEACH, VA 23453 • CANADA: 210 SHEARSON CRESCENT, CAMBRIDGE, ON N1T 1J6
PHONE • 1.800.265.6630 • 519.621.7651 • FAX: 1.800.482.9795 • 519.621.7939 • E-MAIL: SALES@RUTHERFORDCONTROLS.COM

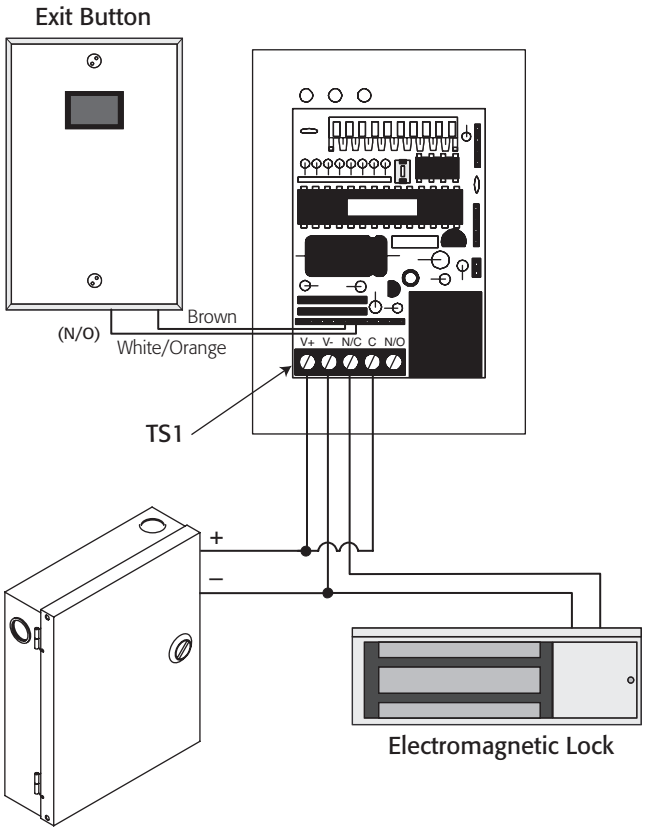

Fig. 1 Basic access control w/ an electromagnetic lock

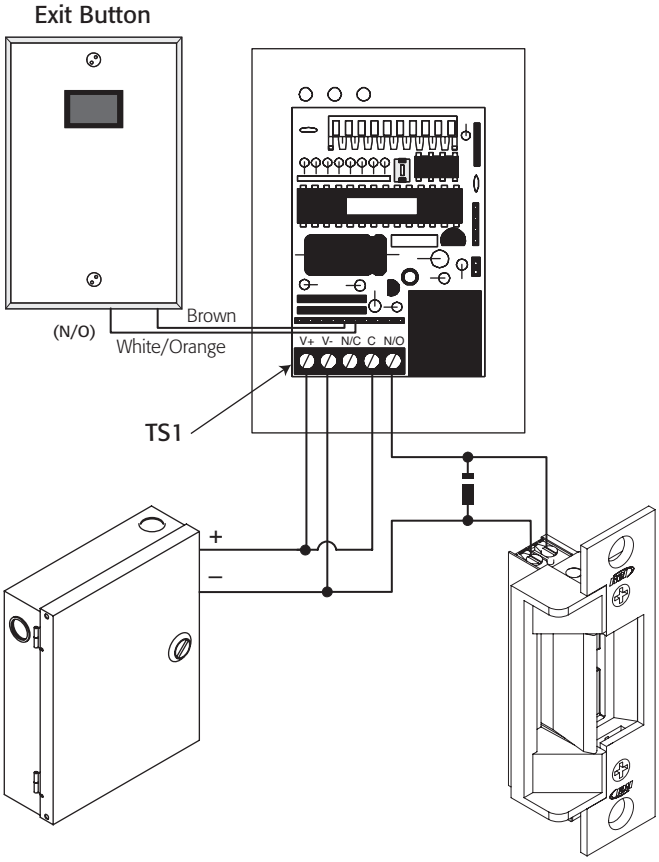

Fig. 2 Basic access control with an electric strike

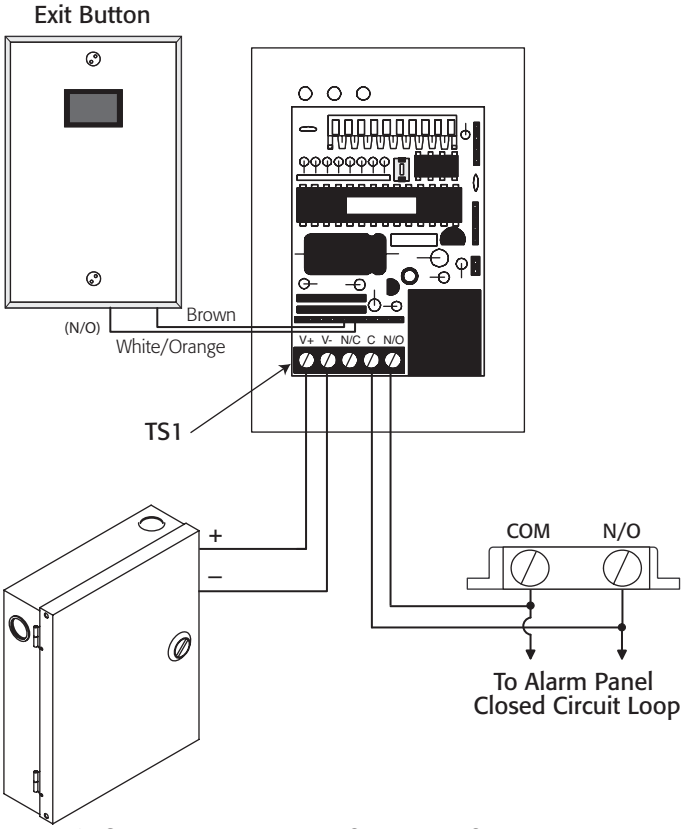

Fig. 3 Shunting a Normally Closed (N/C) Zone

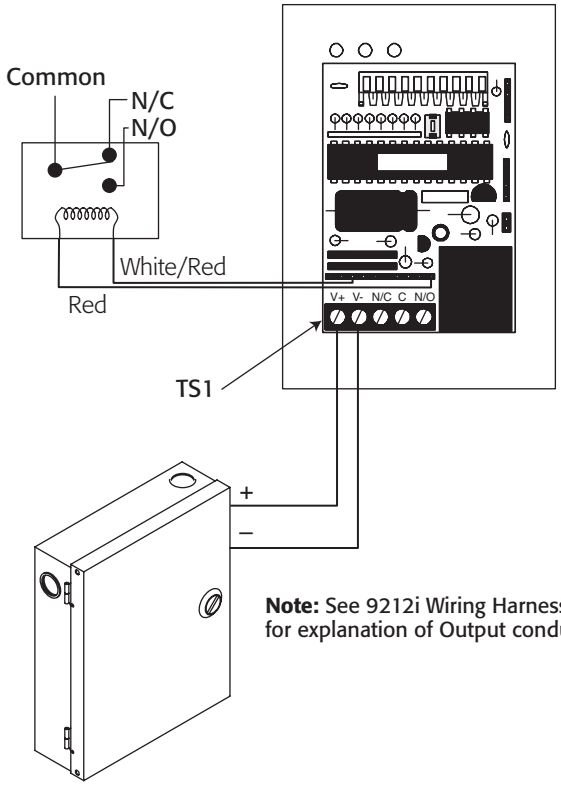

Note: See 9212i Wiring Harness details (Fig. 6) for explanation of Output conductors.

Fig. 4 Wiring an Accessory Relay

©2013 RUTHERFORD CONTROLS • WWW.RUTHERFORDCONTROLS.COM
USA: 2517 SQUADRON COURT, SUITE 104, VIRGINIA BEACH, VA 23453 • CANADA: 210 SHEARSON CRESCENT, CAMBRIDGE, ON N1T 1J6
PHONE • 1.800.265.6630 • 519.621.7651 • FAX: 1.800.482.9795 • 519.621.7939 • E-MAIL: SALES@RUTHERFORDCONTROLS.COM

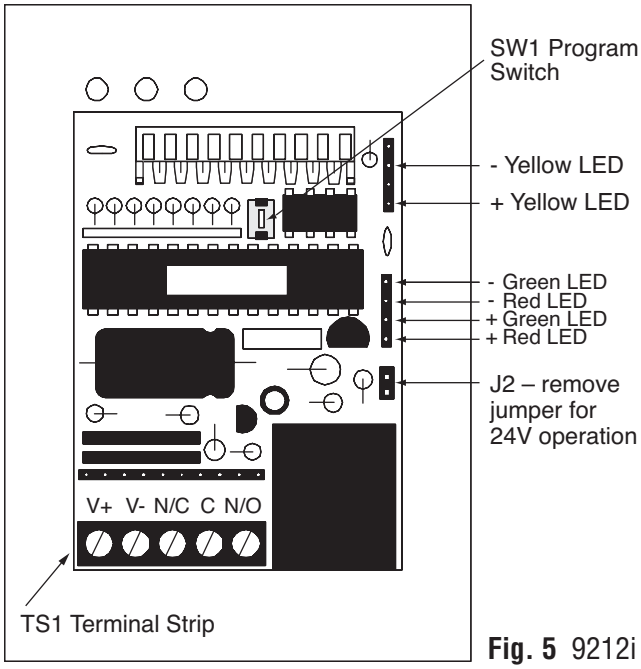

Fig. 5 9212i Circuit Board

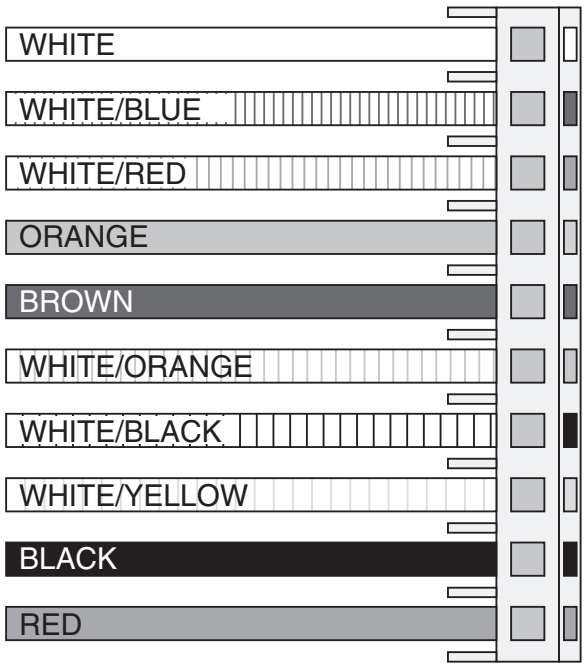

Wire Color	Wire Function
White	Not Used
White/Blue	Output 3 (50mA sink to ground)
White/Red	Output 2 (50mA sink to ground)
Orange	Output 4/panic (50mA sink to ground)
Brown	Remote Triggering Input (REX)
White/Orange	Remote Triggering Input (REX)
White/Black	K (in) Keypad Active
White/Yellow	K (out)
Black	Ground (outputs only)
Red	V+ Filtered (outputs only)

Fig. 6 9212i Wiring Harness.
WARNING: Plug this harness in with the leads facing down! Permanent damage may result if incorrectly inserted.

©2013 RUTHERFORD CONTROLS • WWW.RUTHERFORDCONTROLS.COM
USA: 2517 SQUADRON COURT, SUITE 104, VIRGINIA BEACH, VA 23453 • CANADA: 210 SHEARSON CRESCENT, CAMBRIDGE, ON N1T 1J6
PHONE • 1.800.265.6630 • 519.621.7651 • FAX: 1.800.482.9795 • 519.621.7939 • E-MAIL: SALES@RUTHERFORDCONTROLS.COM