RUTHERFORD CONTROLS
A DORMA Group Company

In or Out... we make it Easy!®

Installation Instructions

These notification appliances can be installed in systems using 12 or 24V using DC or full-wave rectified (FWR) power supplies.

The indoor model 914 has an operating temperature range of 32ºF to 120ºF (0ºC to 49ºC). Model 914W meets NEMA 3R requirements with an operating temperature of -40ºF to 151ºF (-40ºC to 66ºC). They are not suitable for ceiling mounting.

Fire Alarm System Considerations

The National Fire Alarm Code, NFPA 72, requires that all horns, used for building evacuation produce temporal coded signals.

Signals other than those used for evacuation purposes do not have to produce the Temporal Coded Signal. Temporal coding is accomplished by interrupting a steady sound in the following manner:

1/2 sec ON; 1/2 sec OFF; 1/2 sec ON; 1/2 sec OFF, etc. (repeatedly)

Horn Selection

Turn the rotary switch on the back of the product to the desired setting. The current draw for each setting is listed in Table 1. The sound output measurement for each horn setting is shown in Table 2.

WARNING: The horn will not work without power. The horn may not be heard. The loudness of the horn meets (or exceeds) current Underwriters Laboratories' standards. However, the sounder may not alert a sound sleeper or one who has recently taken medication/drugs or alcoholic beverages. The sounder may not be heard if it is located on a different building level from the person in hazard or if it is placed too far away to be heard over ambient noise (i.e. traffic, air conditions, machinery or music appliances). The sounder may also not be heard by persons who are hearing impaired.

Table 1 - Horn Current Draw

Pos	Sound Pattern	Sound Level	8–17.5 Volts (mA)	16–33 Volts (mA)
1	Temporal	High	57	69
2		Medium	44	58
3		Low	38	44
4	Non-temporal	High	57	69
5		Medium	42	60
6		Low	41	50
7	Coded	High	57	69
8		Medium	44	56
9		Low	40	52

NOTE: In positions 7, 8 and 9, temporal coding must be provided by the NAC (Notification Appliance Circuit). If the NAC voltage is held constant, the horn output will remain constantly on.

When connected to an RCI DE8310 Delayed Egress electromagnetic lock, set Audio Select Dial to Sound Pattern 7, 8 or 9 only.

©2014 RUTHERFORD CONTROLS • WWW.RUTHERFORDCONTROLS.COM

USA: 2517 SQUADRON COURT, SUITE 104, VIRGINIA BEACH, VA 23453 • CANADA: 210 SHEARSON CRESCENT, CAMBRIDGE, ON N1T 1J6
PHONE • 1.800.265.6630 • 519.621.7651 • FAX: 1.800.482.9795 • 519.621.7939 • E-MAIL: SALES@RUTHERFORDCONTROLS.COM

Table 2 - Horn Output in UL Reverberant Room:

Switch Position	Sound Pattern	Sound Level	8–17.5 Volts* (dB)	16–33 Volts* (dB)	24 V Nominal Measurements (dB)	
					Reverberant	Anechoic
1	Temporal	High	78	84	88	99
2		Medium	74	80	86	96
3		Low	71	76	83	94
4	Non-temporal	High	82	88	93	100
5		Medium	78	85	90	98
6		Low	75	81	88	96
7	Coded	High	82	88	93	101
8		Medium	78	85	90	97
9		Low	75	81	88	96

* Minimum dB rating for Operational Voltage Range as per UL 464.

Mounting Indoor Wall Model 914W

1. Attach mounting plate to junction box. Compatible with 4" square, single gang, double gang, and 4" octagon junction boxes.

2. Connect field wiring to terminals, per mounting bracket label.

3. Hook tabs on the product housing into the grooves on mounting plate.

4. Swing product into position to fully engage the pins on the product with the terminals on the mounting plate.

5. Secure product by tightening the single mounting screw. For tamper resistance use the enclosed Torx screw.

Model 914WPR

1. This outdoor sounder must be installed using the proper weatherproof back box (SA-WBB). Do not attempt to use boxes other than the ones supplied.

2. The wall mount box internal post must be in the lower left corner.

3. Two threaded holes are provided in the sides of the box for 3/4 inch conduit adapters. Knockout plugs in the back of the box can be used for 1/2 or 3/4 inch rear entry. Unused holes **must** be sealed. Plugs are provided.

4. It is the responsibility of the installer to make sure that all openings and connections are sealed properly.

5. Water may pool on the back box due to condensation or direct exposure to rain or snow. Use watertight fittings for all wiring connections. With plastic plugs, apply teflon tape and/or silicone sealant to reduce the chance of leakage.

6. Follow steps 2 – 6 of the indoor mounting

Wall Mount Weatherproof Backbox:

Proper Orientation

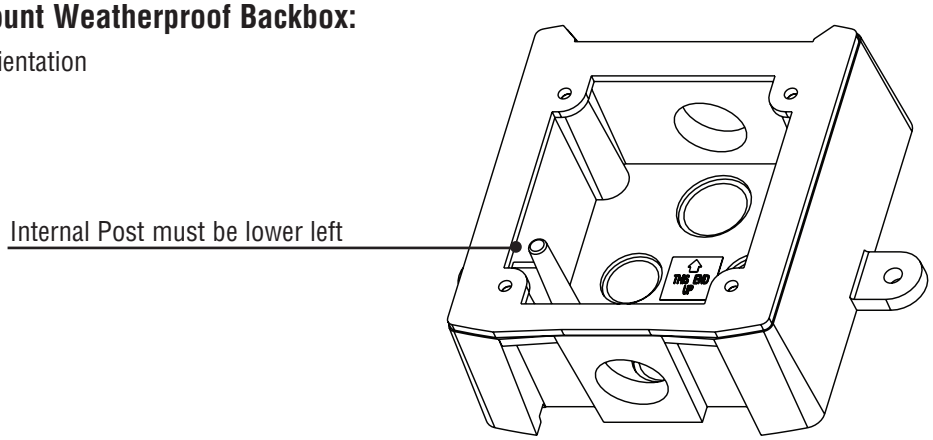

©2014 RUTHERFORD CONTROLS • WWW.RUTHERFORDCONTROLS.COM
USA: 2517 SQUADRON COURT, SUITE 104, VIRGINIA BEACH, VA 23453 • CANADA: 210 SHEARSON CRESCENT, CAMBRIDGE, ON N1T 1J6
PHONE • 1.800.265.6630 • 519.621.7651 • FAX: 1.800.482.9795 • 519.621.7939 • E-MAIL: SALES@RUTHERFORDCONTROLS.COM