INSTALLATION 909

SURFACE AND FLUSH MOUNT ROCKER SWITCHES

RUTHERFORD CONTROLS
A DORMA Group Company

In or Out... we make it Easy!®

Instructions

909 Surface Mount

1. Remove decorative bezel around switch.
2. Mount switchbase in desired location.
3. Connect wires under appropriate terminals (Fig. 1).
4. Replace decorative bezel.

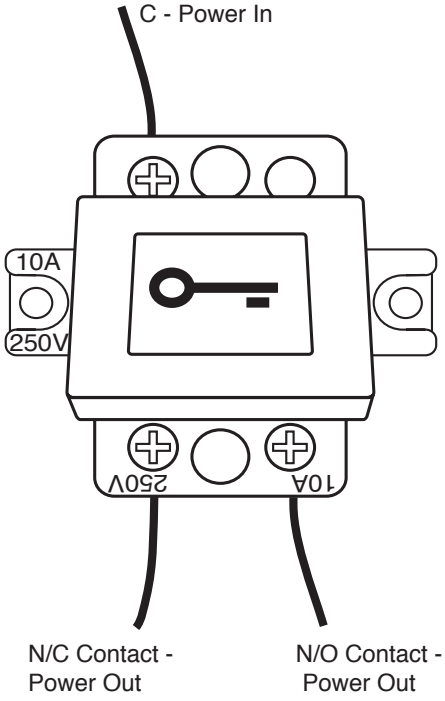

Fig. 1

909 Flush Mount *

1. Remove decorative bezel around switch.
2. Cut a 2-1/4" x 1-1/4" hole in the drywall.
3. Connect wires under appropriate terminals (Fig. 2).
4. Insert switch into hole. Tighten the two metal slot screws, until switch is secure.
5. Replace decorative bezel.

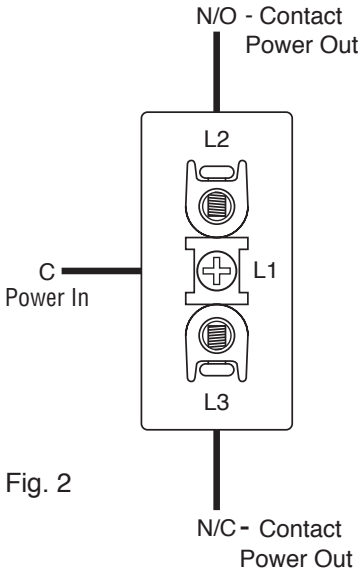

Fig. 2

Description	Switch Mode	Switch Configuration	Switch Rating	Standard Finish
909-MO Rocker Switch	Momentary Action	SPDT N/O or N/C	10A @250V	Beige (plastic)
909-MA Rocker Switch	Maintained Action*	SPDT N/O or N/C	10A @250V	Beige (plastic)

NOTE: Specifications are subject to change without notice. N/C – Normally Closed; N/O – Normally Open; C - Common
*Maintained not available for Flush Mount.

© 2014 RUTHERFORD CONTROLS INT'L | A DORMA GROUP COMPANY
WWW.RUTHERFORDCONTROLS.COM • PHONE: 1.800.265.6630 • FAX: 1.800.482.9795 • E-MAIL: SALES@RUTHERFORDCONTROLS.COM
PCN14027
R03/14TG-1