INSTALLATION 8375

Surface MicroMag® Electromagnetic Lock

In or Out... we make it Easy!®

RUTHERFORD CONTROLS
A DORMA Group Company

PLEASE DELIVER ALL INSTALLATION INSTRUCTIONS TO THE END-USER UPON COMPLETION OF THE INSTALLATION.

Pre-Installation Instructions

1. This product must be installed according to all applicable building and life safety codes.
2. Due to the variety of mounting configurations available with this product, a survey and assessment of the physical area in which the product will be installed must be performed.
3. The door frame must be inspected and deemed structurally sound prior to installation of the electromagnetic lock. The structural integrity of the mounting surfaces must be strong enough to meet or exceed the holding force of the product.
4. The product must be protected from potential damage due to intruders or tampering.
5. The product should be installed in a location that will not hinder or create a potential safety hazard to authorized personnel accessing the protected area.
6. Because electromagnetic locks are used in a variety of applications and different door frame configurations, an experienced installer with knowledge of this product must make a determination of the optimal mounting method for this specific application.
7. The components, hardware, installation instructions and mounting template included with this product are intended for use on outswinging doors.
8. Do not install this product on the exterior of buildings.
9. Do not use as a doorstop. This will void warranty.
10. Separate accessories not included with this product must be used in the following applications:
    - Inswinging doors
    - Narrow head jamb situations or center-hung doors
    - Wherever there is insufficient space on the door frame header to mount the lock
    - Glass or Herculite doors that do not have a door frame
    - Hollow metal or wood frames where the door stop is not thick enough to allow the product to be installed
    - Wherever an obstruction in the door prevents installation of the armature plate at a proper height
    - Doors that do not permit the armature plate to be mounted low enough to meet the magnet surface

    Refer to the Product Accessories Guide section of the Installation Instructions for further information. Accessories may impact holding force.
11. Installation of this product should be done by an experienced installer with knowledge of this product.

NOTE: It is highly recommended that thread locking compound be applied to all screws during installation to reduce chance of screws loosening over extended time.

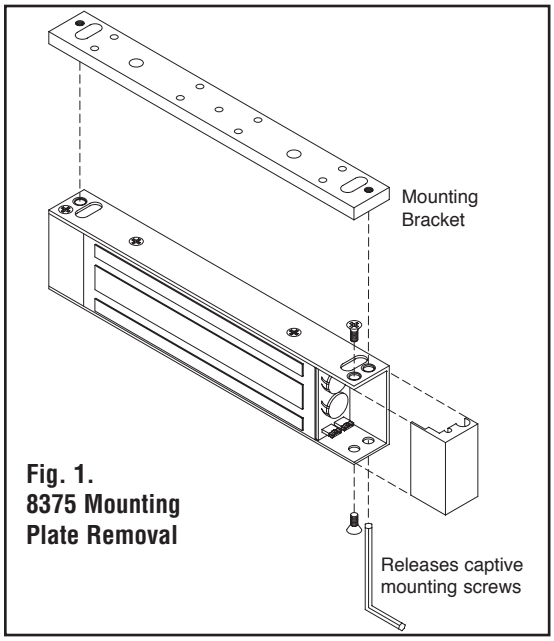

Fig. 1. 8375 Mounting Plate Removal

Fig. 2 – 8375 Voltage Selection Jumper Setting

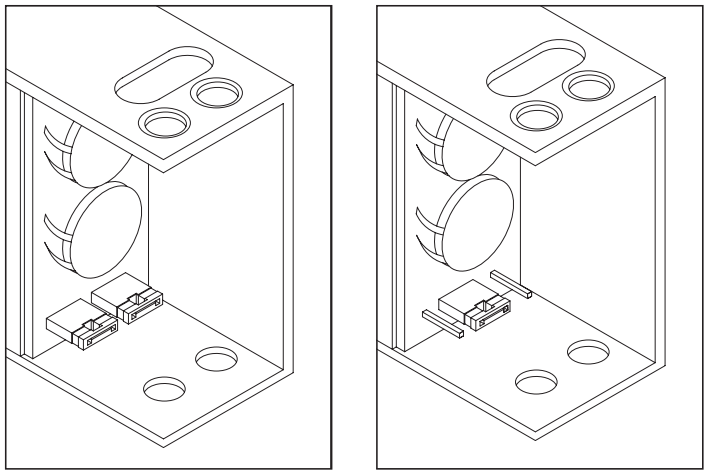

12VDC Operation

24VDC Operation
(Factory Setting)

Electromagnetic lock installations must conform to local fire codes, National building codes and Life Safety Codes.

© 2014 RUTHERFORD CONTROLS INT'L | A DORMA GROUP COMPANY
WWW.RUTHERFORDCONTROLS.COM • PHONE: 1.800.265.6630 • FAX: 1.800.482.9795 • E-MAIL: SALES@RUTHERFORDCONTROLS.COM
PCN14053
R09/14TG

Installation Instructions

Mount the electromagnetic lock to the door frame as outlined on the installation template included with the product.

NOTE: During installation of the armature plate to the door it is essential that the armature plate remains movable. The armature plate must be allowed to pivot on the center-mounting bolt to allow proper alignment with the magnet surface. If the plate is not aligned with the magnet surface, the lock may lose holding force or not lock at all.

The head of the armature mounting bolt ships with a rubber washer affixed to it. This washer should project slightly beyond the surface of the armature plate. This is to allow the washer to expand when power is removed and break the air vacuum between the plate and the magnet surface. If this washer is removed or trimmed the lock will appear to have some holding force even when power is removed.

For added safety, thread locking compound has been provided for the armature plate bolt and the four captive electromagnetic lock mounting screws.

WARNING: Improper installation, maintenance, inspection or usage of the product or any related accessories or parts may cause the electromagnetic lock, armature plate and associated hardware to disengage and fall, causing serious bodily injury and property damage. Rutherford Controls Int'l Inc. and/or Rutherford Controls Int'l Corp. will not be liable to the installer, purchaser, end user or anyone else for damage or injury to person or property due to improper installation, care, storage, handling, maintenance, inspection, abuse, misuse or act of God or nature involving this product or any related accessories or parts.

Route the power supply connecting wire through the door frame and into the wire access hole in the top of the magnet housing. Connecting wire should be of sufficient gauge for the lock being installed and the distance being run. See table for current draw specifications and wire gauge chart.

NOTE: All RCI electromagnetic locks must be powered with filtered and regulated DC power supplies such as the RCI 10 Series UL Listed power supply. RCI offers a full line of power supplies and switching devices that are suitable for use with the 8375 Series locks.

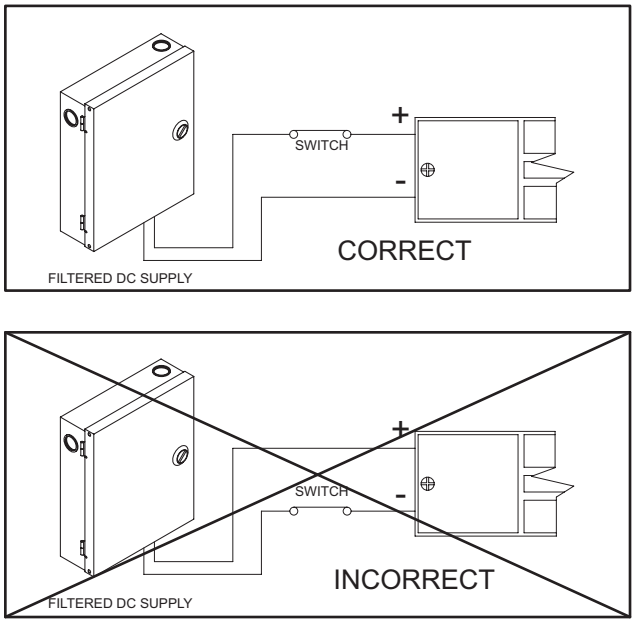

Fig. 3 – Power Connections

To Ensure Instant Release All switching devices must be wired in between the DC power source and the positive terminal of the lock in Fig 3.

Switching the negative power supply line will not allow the lock to release immediately. RCI electromagnetic locks contain MOV's for surge suppression and do not require any additional suppression to be added during installation. The installation of diodes across the lock input terminals will cause a delay in release.

Inspection and Maintenance

This product and all related accessories or parts must be inspected and maintained on a **quarterly basis**. Contacting surfaces of the electromagnetic lock and armature plate must be kept free of contaminating materials. Surfaces must be cleaned periodically with a non-abrasive cleaner.

All mounting fasteners must be inspected on a **quarterly basis**. When properly installed, the ends of the armature plate allow a slight movement but the plate will feel secure when grasped at the bolt. There should be no movement to the mounting bracket or housing of the electromagnetic lock.

For added safety, thread locking compound has been provided for the armature plate bolt and the four captive electromagnetic lock mounting screws.

WARNING: Improper installation, maintenance, inspection or usage of the product or any related accessories or parts may cause the electromagnetic lock, armature plate and associated hardware to disengage and fall, causing serious bodily injury and property damage.

PLEASE DELIVER ALL INSTALLATION INSTRUCTIONS TO THE END-USER UPON COMPLETION OF THE INSTALLATION.

Specifications

Mechanical:
8375 Lock Dimensions
(Including 1/8" (3.2mm) mounting bracket):
13/16"D x 1-1/2"W x 6-17/32"L
(21mm x 38mm x 166mm)
Armature Plate: 11/32" x 1-1/4" x 5-1/8"
(8.5mm x 32.0mm x 130.0mm)

Electrical:
Voltage: 12VDC or 24 VDC
(Selected by choosing appropriate voltage selection jumpers)
Current: 0.36A @ 12VDC
0.18A @ 24VDC

Environmental:
Not for use in outdoor environments.
Circuit board operating temperature:
14 to 140° F (-10 to 60° C)

NOTE: Specifications are subject to change without notice.

8375 Current Requirements

Voltage	Current
12VDC	0.36A
24VDC	0.18A

8375 Series Troubleshooting Guide

Problem	Solution
Cannot remove the lock mounting plate from top of magnet for installation.	Insert supplied Allen wrench into mounting bolt holes in the bottom of the lock housing and turn (See Fig. 1).
Lock is installed but has no holding force at all.	- Check power supply. DC power should be slightly over the voltage specifications outlined on the packaging. EG: for 12VDC operation supply should be set at 12VDC-13VDC. - Check connections at power supply, connected releasing devices and lock terminals. - Check that voltage selection jumpers are correctly set - Check that connections from lock circuit board to magnet core have not been broken or loosened during installation.
Lock has enough holding force to lightly hold a screwdriver or set of pliers but door will not lock.	Check to see that armature plate is correctly aligned with the electromagnetic lock. If there is improper alignment, make a 1/4" turn of the armature plate mounting bolt and check for alignment. Make sure to follow the armature plate mounting instructions on the template and box on Page 2 of this install.
Lock is operating and locking but the armature plate is "humming" against the surface of the lock.	This generally indicates that the lock is either operating on AC voltage or there is some AC voltage present in the DC supply. A properly filtered and regulated DC power supply is required to achieve optimal operation from the lock.
Lock is not releasing immediately upon removal of power.	- Ensure that switching devices are interrupting the DC power and not the AC power supply voltage - Ensure rubber washer on armature plate mounting bolt has not been removed or damaged - Check that switching device interrupts the positive wire and not the negative wire (see Fig.3) - Remove any Diodes or other suppression devices that may be installed
Lock surface is very warm to the touch.	While some heat rise is normal for the 8375, excessive heat generally indicates that the voltage selection jumpers are incorrectly set.

Product Accessories

Accessories may impact holding force.
(Separate installation instructions provided with accessories.)

Part	Usage	Example
Top Jamb Bracket	Top Jamb bracket and angle bracket kit for use when mounting lock on a door that swings inwards. Magnet mounts to the underside of an angle bracket mounted on the frame. Armature plate mounts to “Z” bracket assembly mounted to door face.	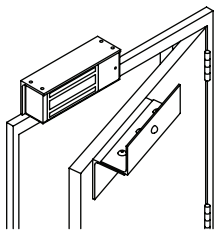
Glass Door Bracket	Allows an armature plate to be mounted to a glass or Herculite door that does not have a frame. The Glass Door Bracket is a “U”-shaped piece of 1/16” thick material that slips over the top of the glass panel and tightens to the glass with setscrews. The Armature plate mounts directly to the surface of the bracket by means of a threaded hole in the bracket assembly plate. Available for both 1/2” and 3/4” thick glass doors.	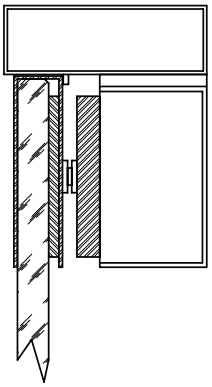
Split Armature Plates	Used for traffic control applications where two doors are to be used with a single 8375 lock. The Split Armature plates are half the length of a standard armature. Each of these is mounted on one of a pair of doors with an 8375 lock centered on the frame between the doors. **NOTE:** Use of split armature plates will reduce holding force.	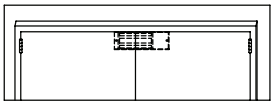
Armature Holder	For use with doors that do not permit the armature plate to be mounted low enough to meet the magnet surface. Eg: Some aluminum framed commercial glass doors. The armature holder can be mounted to whatever frame is available and the armature plate in turn mounted to the holder. Available in Pocket style only.	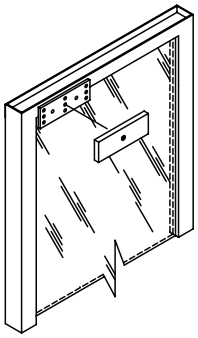
Space Bar	For use when an obstruction in the door prevents the installation of the armature plate at a proper height. If the armature plate needs to be lowered then a spacer bar can be used to lower the lock from the frame. Spacer Bar - 1/4" x 13/16" x 6-1/2" only Contact RCI for full details.	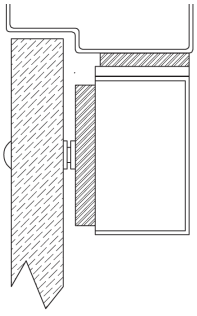

WIRE GAUGE SELECTIONS

Total One Way Length of Wire Run (ft.)	Load Current @24V							
	1/4A	1/2A	3/4A	1A	1-1/4A	1-1/2A	2A	3A
100	24	20	18	18	16	16	14	12
150	22	18	16	16	14	14	12	10
200	20	18	16	14	14	12	12	10
250	18	16	14	14	12	12	12	10
300	18	16	14	12	12	12	10	--
400	18	14	12	12	10	10	--	--
500	16	14	12	10	10	--	--	--
750	14	12	10	10	--	--	--	--
1000	14	10	10	--	--	--	--	--
1500	12	10	--	--	--	--	--	--

Total One Way Length of Wire Run (ft.)	Load Current @12V							
	1/4A	1/2A	3/4A	1A	1-1/4A	1-1/2A	2A	3A
100	20	18	16	14	14	12	12	10
150	18	16	14	12	12	12	10	--
200	16	14	12	12	10	10	--	--
250	16	14	12	10	10	10	--	--
300	16	12	12	10	10	--	--	--
400	14	12	10	--	--	--	--	--
500	14	10	10	--	--	--	--	--
750	12	10	--	--	--	--	--	--
1000	10	--	--	--	--	--	--	--
1500	10	--	--	--	--	--	--	--

Wire Gauge Chart courtesy of Electronic Locking Devices by John L. Schum

© 2014 RUTHERFORD CONTROLS INT'L | A DORMA GROUP COMPANY