INSTALLATION 8371/8372

Surface MiniMag® Electromagnetic Locks

RUTHERFORD CONTROLS
A DORMA Group Company

In or Out... we make it Easy!®

PLEASE DELIVER ALL INSTALLATION INSTRUCTIONS TO THE END-USER UPON COMPLETION OF THE INSTALLATION.

Pre-Installation Instructions

1. This product must be installed according to all applicable building and life safety codes.
2. Due to the variety of mounting configurations available with this product, a survey and assessment of the physical area in which the product will be installed must be performed.
3. The door frame must be inspected and deemed structurally sound prior to installation of the electromagnetic lock. The structural integrity of the mounting surfaces must be strong enough to meet or exceed the holding force of the product.
4. The product must be protected from potential damage due to intruders or tampering.
5. The product should be installed in a location that will not hinder or create a potential safety hazard to authorized personnel accessing the protected area.
6. Because electromagnetic locks are used in a variety of applications and different door frame configurations, an experienced installer with knowledge of this product must make a determination of the optimal mounting method for this specific application.
7. The components, hardware, installation instructions and mounting template included with this product are intended for use on outswinging doors.
8. Do not install this product on the exterior of buildings.
9. Do not use as a doorstop. This will void warranty.
10. Separate accessories not included with this product must be used in the following applications:
    - Inswinging doors
    - Narrow head jamb situations or center-hung doors
    - Wherever there is insufficient space on the door frame header to mount the lock
    - Glass or Herculite doors that do not have a door frame
    - Hollow metal or wood frames where the door stop is not thick enough to allow the product to be installed
    - Wherever an obstruction in the door prevents installation of the armature plate at a proper height
    - Doors that do not permit the armature plate to be mounted low enough to meet the magnet surface

    Refer to the Product Accessories Guide section of the Installation Instructions for further information. Accessories may impact holding force.
11. Installation of this product should be done by an experienced installer with knowledge of this product.

NOTE: It is highly recommended that thread locking compound be applied to all screws during installation to reduce chance of screws loosening over extended time.

Instructions

1. Mount the electromagnetic lock to the door frame as outlined on the installation template included with the product.

NOTE: During installation of the armature plate to the door it is essential that the armature plate remains movable. The armature plate must be allowed to pivot on the center-mounting bolt to allow proper alignment with the magnet surface. If the plate is not aligned with the magnet surface, the lock may lose holding force or not lock at all.

The head of the armature mounting bolt ships with a rubber washer affixed to it. This washer should project slightly beyond the surface of the armature plate. This is to allow the washer to expand when power is removed and break the air vacuum between the plate and the magnet surface. If this washer is removed or trimmed the lock will appear to have some holding force even when power is removed.

For added safety, thread locking compound has been provided for the armature plate bolt and the four captive electromagnetic lock mounting screws.

WARNING: Improper installation, maintenance, inspection or usage of the product or any related accessories or parts may cause the electromagnetic lock, armature plate and associated hardware to disengage and fall, causing serious bodily injury and property damage. Rutherford Controls Int'l Inc. and/or Rutherford Controls Int'l Corp. will not be liable to the installer, purchaser, end user or anyone else for damage or injury to person or property due to improper installation, care, storage, handling, maintenance, inspection, abuse, misuse or act of God or nature involving this product or any related accessories or parts.

2. Route the power supply wire through door frame and into magnet housing. Connecting wire should be of sufficient gauge for the lock being installed and the distance being run. (See table on page 6.)

© 2015 RUTHERFORD CONTROLS INT'L | A DORMA GROUP COMPANY
WWW.RUTHERFORDCONTROLS.COM • PHONE: 1.800.265.6630 • FAX: 1.800.482.9795 • E-MAIL: SALES@RUTHERFORDCONTROLS.COM

8371/8372 Electromagnetic Lock Installation Instructions (Continued)

Power Input Requirements		
MODEL	12VDC	24VDC
8371	0.52A	0.26A
8372	1.04A	0.52A

Wiring : For Unmonitored or DSS Sensor Models

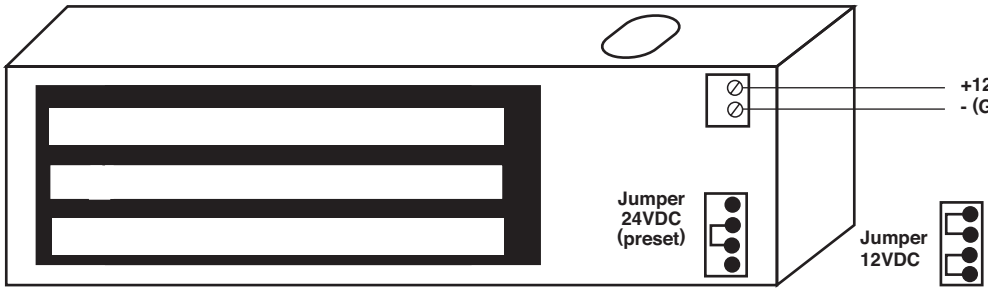

FOR MODELS WITH OPTIONAL DSS
contacts are rated 0.20A@12VDC and 0.12A @ 24VDC
2 x BLUE LEADS Normally Open
shown with Door Open

SCS (Security Condition Sensor) with LED

This feature can detect the quality of the locking bond between the surface of the magnet and the armature plate. The sensitivity of this feature is such that a foreign object with a thickness of .007" (.18mm) is sufficient to allow the sensor to detect a problem.

Due to the sensitivity of this feature and the necessity to maintain a reliable locking bond, these surfaces must be kept free of contaminating materials. Both the lock surface and the armature plate must be cleaned periodically with a non-abrasive cleanser. Alignment of armature plate and magnet is required to ensure proper function of sensor.

Green LED indicates door locked with secure bond.
Red LED indicates door unlocked or poor bond.

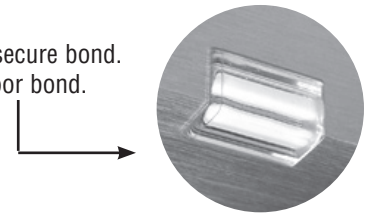

DSS (Door Status Sensor)

The DSS option monitors the position of the door upon which the lock is installed. A SPST reed switch eliminates the need for extra sensors to be installed on the door for notification of security or access control systems. The DSS option comes with a magnet pre-installed into the lock armature plate for signaling the reed switch in the housing when the door is closed. Care should be taken during the final testing of the lock to ensure that the DSS option is operating in the desired manner.

UL 294 Performance Ratings:
Access Control Line Security : Level I
Destructive Attack : Level I
Endurance : Level IV
Standby Power : Level I

Wiring : For SCS or SCS/DSS Combination Models

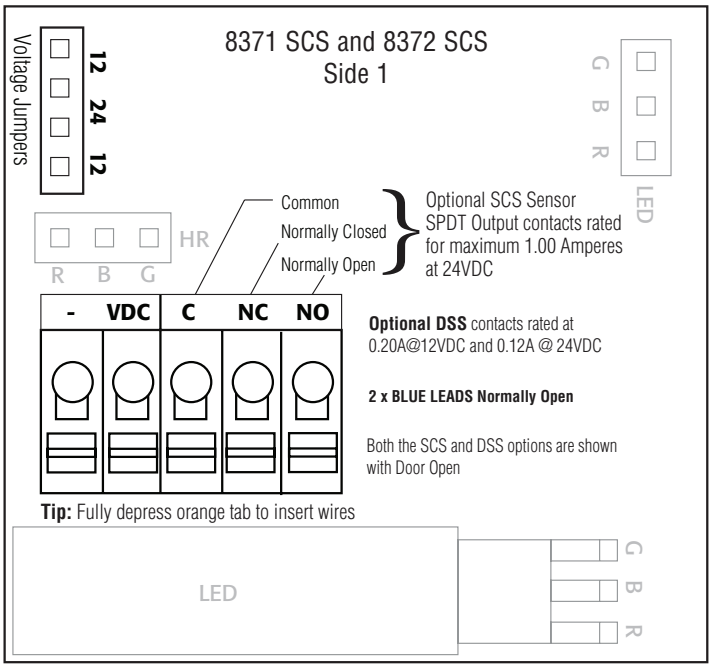

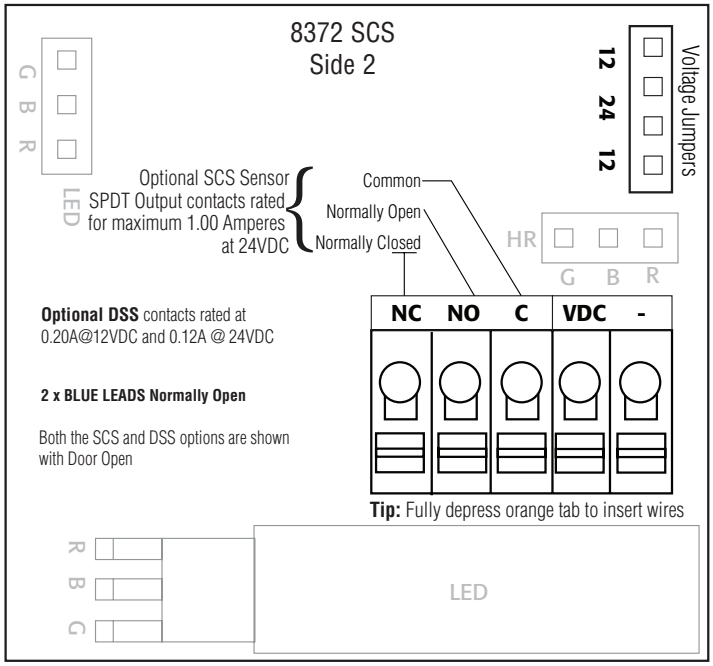

Power Connections

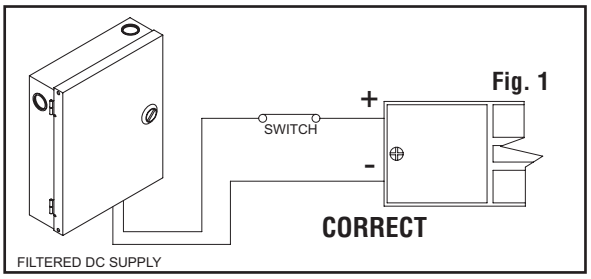

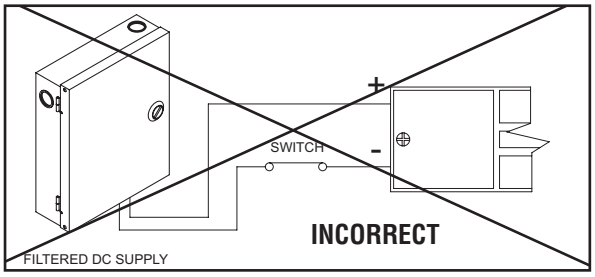

NOTE: All RCI electromagnetic locks must be powered with filtered and regulated DC power supplies such as the RCI 10 Series UL Listed power supply. RCI offers a full line of power supplies and switching devices that are suitable for use with the 8371 and 8372 Surface MiniMag® locks.

To Ensure Instant Release All switching devices must be wired in between the DC power source and the positive terminal of the lock as shown.

Switching the negative power supply line will not allow the lock to release immediately. RCI electromagnetic locks contain MOV's for surge suppression and do not require any additional suppression to be added during installation. The installation of diodes across the lock input terminals will cause a delay in release.

Anti-Tamper Feature - Two screws prevent insertion of an Allen wrench into the captive mounting bolt opening on the bottom of the lock. Fig. 2 shows their location. One screw also secures the wiring cavity cover. The mounting plate cannot be separated from the lock without removing these two screws. There is an additional anti-tamper screw under the wiring cavity cover. See Fig. 3.

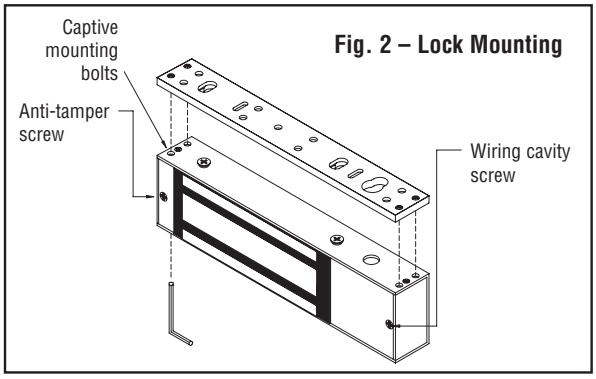

Fig. 2 – Lock Mounting



Fig. 3

Anti-tamper screw (under wiring cavity)

Specifications

Mechanical: including 3/16" [5mm] mounting bracket:
8371 Lock Dimensions:
1"D x 1-7/8"W x 9-3/8"L (25 x 48 x 238mm)
8372 Lock Dimensions:
1"D x 1-7/8"W x 18-3/4"L (25x 48 x 476mm)
Armature Plate Dimensions:
1/2"D x 1-1/2"W x 7-1/4"L (13 x 38 x 185mm)

Electrical:
Voltage: 12VDC or 24VDC
Current: Max 0.52A at 12VDC (each lock on 8372 model)
Max 0.26A at 24VDC (each lock on 8372 model)
SCS Output Relay*: SPDT relay. Contacts rated at 1.0A@24VDC
DSS Reed Switch*: Magnetically actuated SPST switch.
Contacts rated for 0.20A @12VDC and 0.12A @ 24VDC
* Effective for either resistive or inductive loads
(power factor ≥ 0.6 with inductive loads)
Environmental:
Not for use in outdoor environments.
Circuit board operating temperature: 32˚ to 120˚F (0˚ to 49˚C)

NOTE: Specifications subject to change without notice.

Inspection and Maintenance

This product and all related accessories or parts must be inspected and maintained on a **quarterly basis**. Contacting surfaces of the electromagnetic lock and armature plate must be kept free of contaminating materials. Surfaces must be cleaned periodically with a non-abrasive cleaner.

All mounting fasteners must be inspected on a **quarterly basis**. When properly installed, the ends of the armature plate allow a slight movement but the plate will feel secure when grasped at the bolt. There should be no movement to the mounting bracket or housing of the electromagnetic lock.

For added safety, thread locking compound has been provided for the armature plate bolt and the four captive electromagnetic lock mounting screws.

WARNING: Improper installation, maintenance, inspection or usage of the product or any related accessories or parts may cause the electromagnetic lock, armature plate and associated hardware to disengage and fall, causing serious bodily injury and property damage.

Product Accessories Guide

Accessories may impact holding force.
(Separate installation instructions provided with accessories.)

Part	Usage	Example
Top Jamb Bracket	Top Jamb bracket and angle bracket kit is required for use when mounting the lock on a door that swings inwards. Magnet mounts to the underside of an angle bracket mounted on the frame. Armature plate mounts to "Z" bracket assembly mounted to door face.	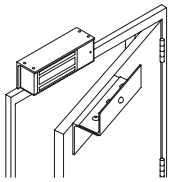
Angle Bracket	Used in a narrow head jamb situation or for center-hung doors. Any place where there is insufficient frame depth to mount the lock. Available in several different sizes and finishes.	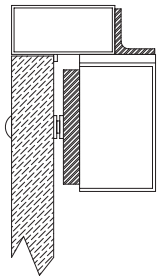
Glass Door Bracket	Allows an armature plate to be mounted to a glass or Herculite door that does not have a frame. The Glass Door Bracket is a "U"-shaped piece of 1/16" thick material that slips over the top of the glass panel and tightens to the glass with setscrews. The Armature plate mounts directly to the surface of the bracket by means of a threaded hole in the bracket assembly plate. Available for both 1/2" and 3/4" thick glass doors.	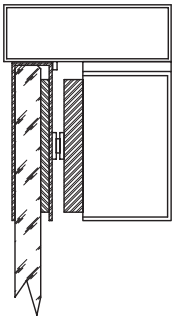
Filler Bars	Used to provide extra mounting space in a hollow metal or wood frame where the door stop of the frame is not thick enough to allow a lock to be installed. Available in several different heights and widths.	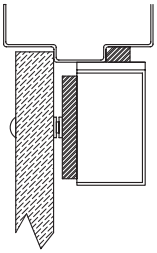
Spacer Bars	For use when an obstruction in the door prevents the installation of the armature plate at a proper height. If the armature plate needs to be lowered then a spacer bar can be used to lower the lock from the frame. Available in several different heights.	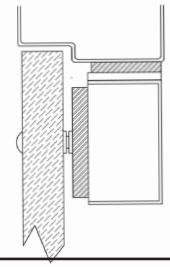
Armature Holder	For use with doors that do not permit the armature plate to be mounted low enough to meet the magnet surface. Eg: Some aluminum framed commercial glass doors. The armature holder can be mounted to whatever frame is available and the armature plate in turn mounted to the holder. Available in pocket style.	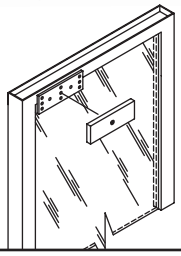

Listings

These products have been successfully tested and evaluated by UL in two separate categories for use in both the United States and Canada.

Auxiliary Lock. The GWXT fire listing qualifies these for use with UL Classified fire doors maximum 4' in width and 8' in height. The 8371 and 8320 are rated up to and including 1 hr.

Special Locking Arrangement Component. Additionally, these products are qualified components for the purpose of locking outward-swinging exit doors against unauthorized egress. They are designed to release automatically in case of a power failure or upon activation of an automatic fire alarm system wired to the power supply fire panel relay.

PLEASE DELIVER ALL INSTALLATION INSTRUCTIONS TO THE END-USER UPON COMPLETION OF THE INSTALLATION

The Following Conditions of Acceptability Apply:

1) This product is intended for use with Special Locking Arrangements which are installed in accordance with the manufacturer's installation and operation instructions, the Life Safety Code, NFPA 101 of the National Fire Protection Association and the local authority having jurisdiction.

2) The power for this unit is to be provided by a Listed (ALVY, FULA, or APHV) Class 2 power supply when designated as a Special Locking Arrangement (FWAX).

3) The suitability of the lead wires is to be evaluated per the requirements for the end-use product.

4) If the product is installed in conjunction with a fire alarm control panel, the wiring from the control unit to this product device shall be for fail-safe operation.

UL testing was conducted on standard models without accessories. These locks are not intended or tested for use as a UL Listed Burglar Alarm System Unit.

Troubleshooting Guide

Problem	Solution
Cannot remove the lock mounting bracket from top of magnet for installation.	Remove anti-tamper screw and cavity cover screw. A second anti-tamper screw will be visible after the cavity cover is removed. Insert supplied Allen wrench into mounting bolt holes in the bottom of the lock housing and turn. (See Fig. 2 and 3.)
LED goes out when door is locked	Check input polarity.
Lock is installed but has no holding force at all.	Check power supply. DC power should be slightly over the voltage specifications outlined on the packaging. eg: for 12VDC operation supply should be set at 12VDC-13VDC. Check connections at power supply, connected releasing devices, lock terminals and lock circuit board to magnet core.
Lock has enough holding force to lightly hold a screwdriver or set of pliers but door will not lock.	Check to see that armature plate is correctly aligned with the electromagnetic lock. If there is improper alignment, make a 1/4" turn of the armature plate mounting bolt and check for alignment. Make sure to follow the armature plate mounting instructions on the template and Page 1 of this install.
Lock is operating and locking but the armature plate is "humming" against the surface of the lock.	This generally indicates that the lock is either operating on AC voltage or there is some AC voltage present in the DC supply. A properly filtered and regulated DC power supply is required to achieve optimal operation from the lock.
Lock is not releasing immediately upon removal of power	Ensure that switching devices are interrupting the DC power and not the AC power supply voltage. Ensure rubber washer on armature plate mounting bolt has not been removed or damaged Check that switching device interrupts the positive wire and not the negative wire (See Fig. 1) Remove any Diodes or other suppression devices that may be installed.

WIRE GAUGE SELECTIONS

Total One-Way Length of Wire Run (ft.)	Load Current @ 24V							
	1/4A	1/2A	3/4A	1A	1-1/4A	1-1/2A	2A	3A
100	24	20	18	18	16	16	14	12
150	22	18	16	16	14	14	12	10
200	20	18	16	14	14	12	12	10
250	18	16	14	14	12	12	12	10
300	18	16	14	12	12	12	10	-
400	18	14	12	12	10	10	-	-
500	16	14	12	10	10	-	-	-
750	14	12	10	10	-	-	-	-
1000	14	10	10	-	-	-	-	-
1500	12	10	-	-	-	-	-	-

Total One-Way Length of Wire Run (ft.)	Load Current @ 12V							
	1/4A	1/2A	3/4A	1A	1-1/4A	1-1/2A	2A	3A
100	20	18	16	14	14	12	12	10
150	18	16	14	12	12	12	10	-
200	16	14	12	12	10	10	-	-
250	16	14	12	10	10	10	-	-
300	16	12	12	10	10	-	-	-
400	14	12	10	-	-	-	-	-
500	14	10	10	-	-	-	-	-
750	12	10	-	-	-	-	-	-
1000	10	-	-	-	-	-	-	-
1500	10	-	-	-	-	-	-	-

Wire Gauge Chart courtesy of Electronic Locking Devices by John L. Schum

© 2015 RUTHERFORD CONTROLS INT'L | A DORMA GROUP COMPANY
WWW.RUTHERFORDCONTROLS.COM • PHONE: 1.800.265.6630 • FAX: 1.800.482.9795 • E-MAIL: SALES@RUTHERFORDCONTROLS.COM