INSTALLATION 8360

MiniMag®
Mortise Electromagnetic Lock

RUTHERFORD CONTROLS
A DORMA Group Company

In or Out... we make it Easy!®

PLEASE DELIVER ALL INSTALLATION INSTRUCTIONS TO THE END-USER UPON COMPLETION OF THE INSTALLATION.

Pre-Installation Instructions

1. This product must be installed according to all applicable building and life safety codes.
2. Due to the variety of mounting configurations available with this product, a survey and assessment of the physical area in which the product will be installed must be performed.
3. The door frame must be inspected and deemed structurally sound prior to installation of the electromagnetic lock. The structural integrity of the mounting surfaces must be strong enough to meet or exceed the holding force of the product.
4. The product must be protected from potential damage due to intruders or tampering.
5. The product should be installed in a location that will not hinder or create a potential safety hazard to authorized personnel accessing the protected area.
6. Because electromagnetic locks are used in a variety of applications and different door frame configurations, an experienced installer with knowledge of this product must make a determination of the optimal mounting method for this specific application.
7. Do not install this product on the exterior of buildings.
8. Do not use as a doorstop. This will void warranty.
9. Installation of this product should be done by an experienced installer with knowledge of this product.

NOTE: It is highly recommended that thread locking compound be applied to all screws during installation to reduce chance of screws loosening over extended time.

WARNING: Improper installation, maintenance, inspection or usage of the product or any related accessories or parts may cause the electromagnetic lock, armature plate and associated hardware to disengage and fall, causing serious bodily injury and property damage. Rutherford Controls Int'l Inc. and/or Rutherford Controls Int'l Corp. will not be liable to the installer, purchaser, end user or anyone else for damage or injury to person or property due to improper installation, care, storage, handling, maintenance, inspection, abuse, misuse or act of God or nature involving this product or any related accessories or parts.

Instructions

1. Hold lock against frame at desired level. Mark the lock's horizontal centerline on the frame and transfer that mark to the door.
2. Determine the vertical centerline of the door thickness and mark this on both the door and the frame.
3. Using these centerline references, cut out the lock mortise in the frame as illustrated.
4. Temporarily fasten the two mounting tabs under the lock flanges. Insert the lock assembly into the frame cavity until the tabs are resting on top. Mark the location of the tab mounting holes.
5. Drill and countersink these four holes to accept the 3/16" screws provided.
6. Remove tabs from lock. Mount the tabs inside the frame.
7. Set voltage dipswitches as follows:
   12VDC operation = 1 and 2 are On / 3 is Off
   24VDC operation = 1 and 2 are Off / 3 is On (factory setting)
   Connect the positive (+) power lead to the red and the negative (-) lead to the black wire.
   Connecting wire should be of sufficient gauge for the lock being installed and the distance being run. See table for current draw specifications and wiring gauge chart.
8. **RLS (Remote Lock Status)**
   This feature can detect the quality of the locking bond between the surface of the magnet and the armature plate. The sensitivity of this feature is such that a foreign object with a thickness of .007" (.18mm) is sufficient to allow the sensor to detect a problem.
   Due to the sensitivity of this feature and the necessity to maintain a reliable locking surface, these surfaces must be kept free of contaminating materials. Both the lock surface and the armature plate must be cleaned periodically with a non-abrasive cleanser. Proper alignment of the armature plate and magnet is required to ensure proper function of sensor.
   The 3 RLS lead wires at the lock corner are: Red = Normally Closed, Black = Common, Green = Normally Open with the door open / unlocked.

© 2015 RUTHERFORD CONTROLS INT'L | A DORMA GROUP COMPANY
WWW.RUTHERFORDCONTROLS.COM • PHONE: 1.800.265.6630 • FAX: 1.800.482.9795 • E-MAIL: SALES@RUTHERFORDCONTROLS.COM
PCN15049
R06/15GR-1

Instructions Cont'd

IMPORTANT: the RLS contacts are rated at a maximum of 0.20 amps. Greater current will cause damage to the sensor and will void warranty.

9. Secure lock on tabs in mortise cavity, carefully applying thread locking compound to the hardware provided.
10. Using centerline references on the door and illustration provided, drill the four "U" clamp mounting holes and cut out the armature mortise.
11. Position the "U" clamp inside door as shown. Insert the two pan head sex nuts from the outside of the door and through the "U" clamp. Insert the two button head hex bolts from the inside of the door and secure into the sex nuts.
12. Position bolt with rubber head through armature plate. Add 3 washers (steel - rubber - steel) onto threads. Carefully apply thread-locking compound to exposed thread and mount onto the "U" clamp.
    NOTE: Do not over tighten. The armature plate must be allowed to pivot on the mounting bolt to allow proper alignment with the magnet surface. If the plate is not aligned with the magnet surface, the lock may lose holding force or not lock at all.

    The head of the armature mounting bolt ships with a rubber washer affixed to it. This washer should project slightly beyond the surface of the armature plate. This is to allow the washer to expand when power is removed and break the air vacuum between the plate and the magnet surface. If this washer is removed or trimmed, the lock will appear to have some holding force even when power is removed.
13. With a release device already installed, energize circuit and close door gently. If magnet does not secure, verify that armature plate is making contact with face of magnetic block. If necessary, install additional steel washers behind armature plate to move armature plate closer to block face and retest.

Inspection and Maintenance

This product and all related accessories or parts must be inspected and maintained on a **quarterly basis**. Contacting surfaces of the electromagnetic lock and armature plate must be kept free of contaminating materials. Surfaces must be cleaned periodically with a non-abrasive cleaner.

All mounting fasteners must be inspected on a **quarterly basis.** When properly installed, the ends of the armature plate allow a slight movement but the plate will feel secure when grasped at the bolt. There should be no movement to the mounting bracket or housing of the electromagnetic lock.

For added safety, thread locking compound has been provided for the armature plate bolt and the four electromagnetic lock mounting screws.

WARNING: Improper installation, maintenance, inspection or usage of the product or any related accessories or parts may cause the electromagnetic lock, armature plate and associated hardware to disengage and fall, causing serious bodily injury and property damage.

PLEASE DELIVER ALL INSTALLATION INSTRUCTIONS TO THE END-USER UPON COMPLETION OF THE INSTALLATION.

NOTE: All RCI electromagnetic locks must be powered with filtered and regulated DC power supplies such as the RCI 10 Series UL Listed power supply. RCI offers a full line of power supplies and switching devices that are suitable for use with the 8300 Series locks.

8360 Electromagnetic Lock Installation Instructions (Continued)

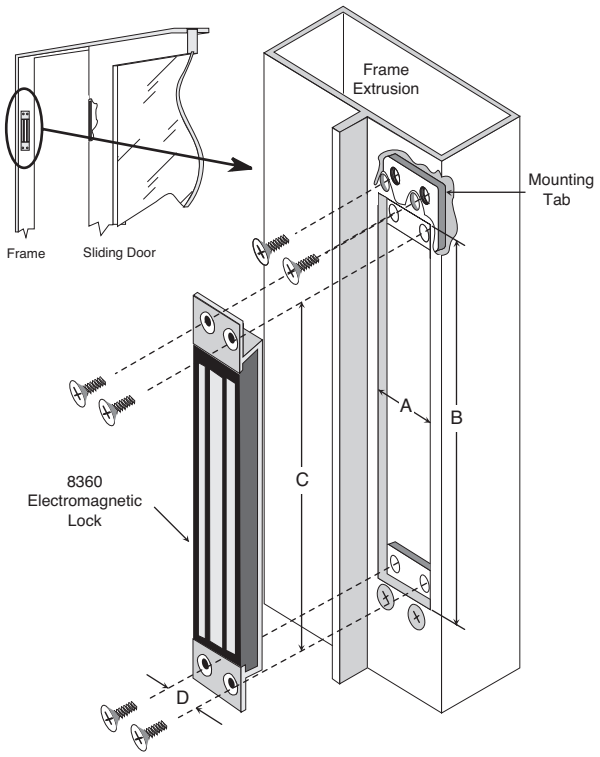

Voltage	Current
12VDC	0.50A
24VDC	0.25A

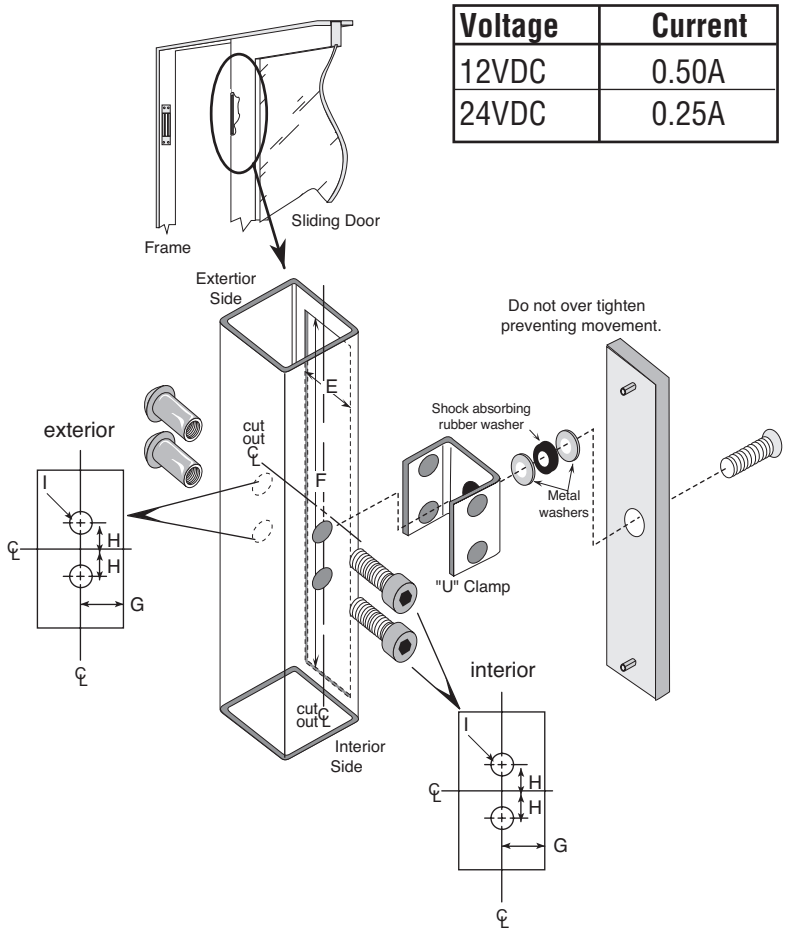

	Frame				Door					
	A	B	C	D	E	F	G	H	I (Interior)	I (Exterior)
Inches Fractional	1-9/16	9	7-15/16	3/4	1-9/16	7-3/8	1-3/16	9/16	5/16	1/2
Inches Decimal	1.57	9.02	7.94	0.75	1.56	7.38	1.20	0.55	0.31	0.47
Metric (mm)	40.0	229.1	201.6	19.1	39.7	187.3	30.6	14.0	7.9	12.0

NOTE: Specifications are subject to change without notice.

WIRE GAUGE SELECTIONS

Total One Way Length of Wire Run (ft.)	Load Current @24V							
	1/4A	1/2A	3/4A	1A	1-1/4A	1-1/2A	2A	3A
100	24	20	18	18	16	16	14	12
150	22	18	16	16	14	14	12	10
200	20	18	16	14	14	12	12	10
250	18	16	14	14	12	12	12	10
300	18	16	14	12	12	12	10	--
400	18	14	12	12	10	10	--	--
500	16	14	12	10	10	--	--	--
750	14	12	10	10	--	--	--	--
1000	14	10	10	--	--	--	--	--
1500	12	10	--	--	--	--	--	--

Total One Way Length of Wire Run (ft.)	Load Current @12V							
	1/4A	1/2A	3/4A	1A	1-1/4A	1-1/2A	2A	3A
100	20	18	16	14	14	12	12	10
150	18	16	14	12	12	12	10	--
200	16	14	12	12	10	10	--	--
250	16	14	12	10	10	10	--	--
300	16	12	12	10	10	--	--	--
400	14	12	10	--	--	--	--	--
500	14	10	10	--	--	--	--	--
750	12	10	--	--	--	--	--	--
1000	10	--	--	--	--	--	--	--
1500	10	--	--	--	--	--	--	--

Wire Gauge Chart courtesy of Electronic Locking Devices by John L. Schum

© 2015 RUTHERFORD CONTROLS INT'L | A DORMA GROUP COMPANY
WWW.RUTHERFORDCONTROLS.COM • PHONE: 1.800.265.6630 • FAX: 1.800.482.9795 • E-MAIL: SALES@RUTHERFORDCONTROLS.COM