INSTALLATION

3525PRX

3525 Electromechanical Data Rack Handle Lock with Proximity Reader

RUTHERFORD CONTROLS
A DORMA Group Company

In or Out... we make it Easy!®



Fig. 1

Specifications

Package Contents

- 3525PRX Electromechanical Data Rack Handle Lock with Proximity Reader
- M3x25 Mounting Screws (qty 4)
- M3x14 Mounting Screw (qty 1)
- Rotation Limiter (qty 1)
- Cam Bolt (qty 1)
- Top Mounting Bracket (qty 1)
- Bottom Mounting Bracket (qty 1)
- Installation Instructions (qty 1)

Actuator Module	
Supply Voltage	12VDC to 24VDC (NOTE: Status LED will blink red if the supply voltage is out of range.)
Standby Current	50mA maximum at 12VDC
Operating Current	200mA maximum at 12VDC (with no external mechanical load applied to handle)
Stall Current	1A maximum at 12VDC (limited to 2 seconds)
Operating Transit Time	1 second maximum (NOTE: Power must be present during transit times. If power is removed while the lock slide is in transit, it will complete it's cycle when power is restored.)
Electronic Unlock Time	3 seconds minimum
Open Collector Outputs	Rated for supply voltage, maximum load
Alarm Outputs	100mA/ output maximum

Proximity Reader Module	
Voltage	12VDC to 24VDC
Operating Current	20mA maximum
Transmit Frequency	125kHz
DATA Signal Voltage	5VDC
DATA Pulse Interval Time	40µs
DATA Signal Delay	2ms
3525PRX	
Overall Dimensions	8-1/4" H x 1-15/32" W x 2-1/8" D (210 x 37 x 54.3mm)

© 2015 RUTHERFORD CONTROLS INT'L | A DORMA GROUP COMPANY
WWW.RUTHERFORDCONTROLS.COM • PHONE: 1.800.265.6630 • FAX: 1.800.482.9795 • E-MAIL: SALES@RUTHERFORDCONTROLS.COM

PCN15063
R11/15GR

Handle Mounting

1. Assemble handle according to the proper handing required.
2. Rotation Limiter & Bottom Mounting bracket determine handing. (Fig. 3)
3. If existing cam or rod mechanism are installed on original handle remove and install on new handle.
4. Ensure the proper cutout in the door. (See Fig. 2)
5. Install handle though cutout and install top & bottom mounting brackets.
6. Install wiring harness and route to hinge side of door securing in place to ensure that nothing will bind or catch.
7. Proceed to wiring. (See Figs. 4, 5 & 6)

Fig. 2

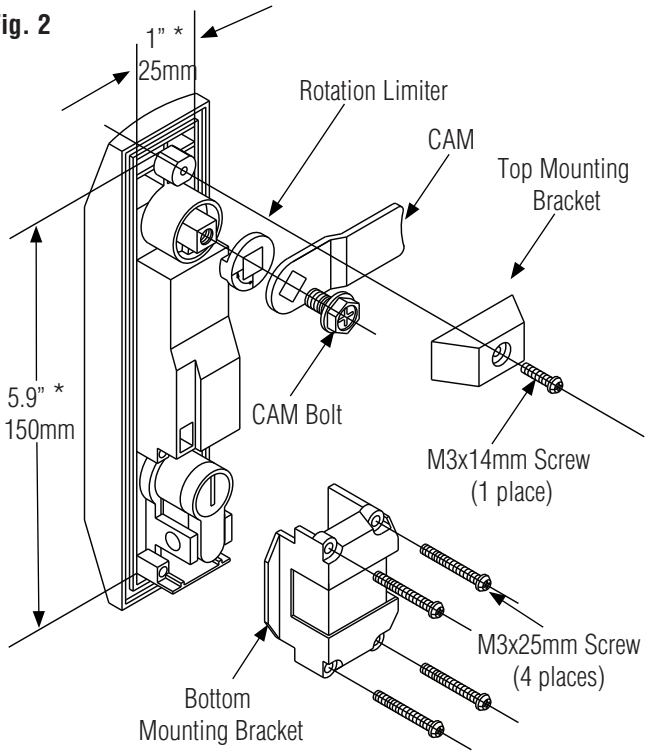

NOTE:

1. Cut-out dimensions.*
2. Handing is determined by rotation limiter and bottom mounting bracket.

Fig. 3

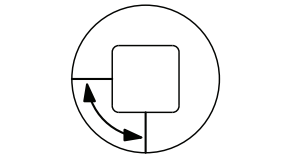

Rotation Limiter

Viewed from back.
Handle rotation is counter clockwise from front.

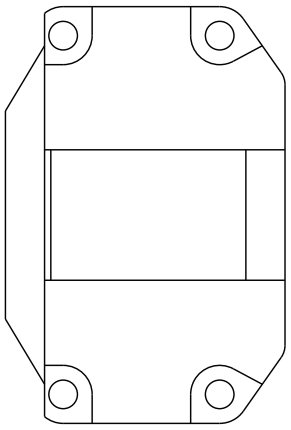

Bottom Mounting Bracket

Viewed from back.
Key rotation is counter clockwise from front.

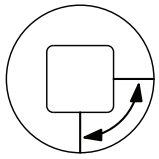

Rotation Limiter

Viewed from back.
Handle rotation is clockwise from front.

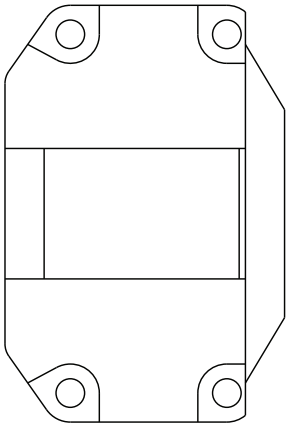

Bottom Mounting Bracket

Viewed from back.
Key rotation is clockwise from front.

© 2015 RUTHERFORD CONTROLS INT'L | A DORMA GROUP COMPANY
WWW.RUTHERFORDCONTROLS.COM • PHONE: 1.800.265.6630 • FAX: 1.800.482.9795 • E-MAIL: SALES@RUTHERFORDCONTROLS.COM

Wiring

The 3525PRX contains two separate functional modules:

The proximity module reads the contents of a compatible proximity cards and converts it to Wiegand format.

The actuator module controls and monitors the locking function of the swinghandle.

These two modules operate independently of each other and require connection to an access control unit (not provided), to be fully functional.

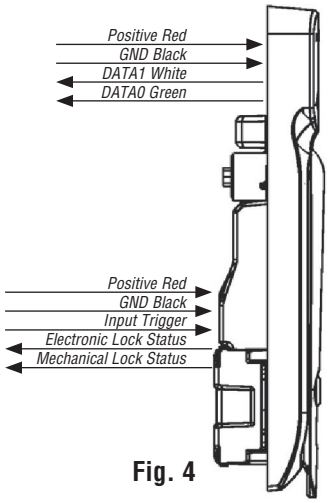

Fig. 4

The proximity reader module of the swinghandle is accessed with a four pin connector attached to a harness connected to the module's circuit board. The module's connector pinout is:

Wire Color	Description	Note
Black	GND	ground
Red	Positive	12 to 24VDC power supply input
Green	DATA0	DATA0 output
White	DATA1	DATA1 output

The actuator module of the swinghandle is accessed with a six pin connector on the rear of the unit, shown below.

Wire Color	Description	Note
Black	GND	ground
Red	Positive	12 to 24 VDC power supply input
Pin 3	N/C	no connect
Orange	Input Trigger	command input (9VDC up to supply voltage, 100 milliseconds minimum)
Brown	Electronic Lock Status	open collector output (sink to ground, 100mA max. load)
Blue	Mechanical Lock Status	open collector output (sink to ground, 100mA max. load)

Input Trigger

This signal is used to control the electronic lock slide position.

For UNLOCKED position: Supply 9VDC minimum (do not exceed supply voltage) for at least 100 milliseconds. The lock will remain unlocked for as long as the signal is present, or a minimum of 3 seconds.
Signal timing can typically be adjusted through the access control device. The input trigger current draw is less than 10mA.

Electronic Lock Status Output Signal

This output will provide a 100mA MAX sink to GND when the lock slide is electromechanically moved to the unlocked position.

Mechanical Lock Status Output Signal

This output will provide a 100mA MAX sink to GND when the handle is in the open position or when the keylock in the actuator is manually unlocked.

NOTE: These outputs are open collector outputs rated for input voltage with a maximum load of 100mA. To avoid damage to the 3525PRX, do not exceed voltage and current ratings.

© 2015 RUTHERFORD CONTROLS INT'L | A DORMA GROUP COMPANY
WWW.RUTHERFORDCONTROLS.COM • PHONE: 1.800.265.6630 • FAX: 1.800.482.9795 • E-MAIL: SALES@RUTHERFORDCONTROLS.COM

Wiring (Continued)

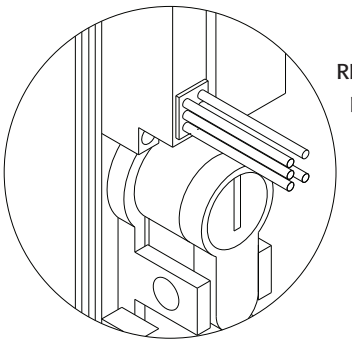

RED: Postive
BLACK: Negative
ORANGE: Activation Trigger
BLUE: 100mA Output for Alarm
BROWN: 100mA Output for Alarm

Fig. 5

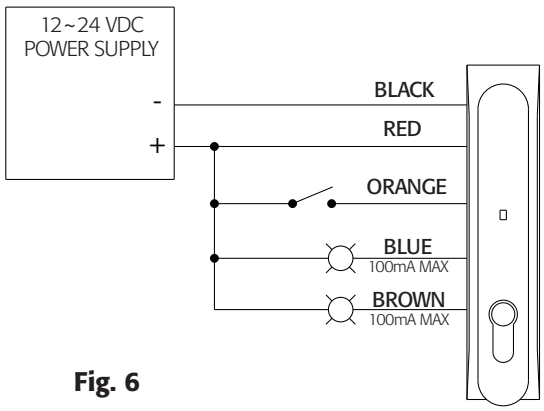

Fig. 6

1. Red & Black are 12 to 24 VDC input voltage.
2. Orange is a positive input with a Normally Open Switch. The lock will unlock for a minimum of 3 seconds on a momentary activation (50 millisecond minimum) or remain unlocked as long as the circuit is closed.
3. Blue is an alarm that will activate when the key is used to unlock the cabinet or anytime the handle is not seated and locked.
4. Brown is an alarm that will activate when the lock is electrically activated and will remain on until the lock electrically relocks.

Lock Status	Latch LED	Alarm Wires
Secure	Steady Blue	Inactive
Electrically Released	Blue/ Magenta Flashing	Brown Active
Mechanically Released	Blue Flashing	Blue Active
Handle Not Fully Closed	Blue/Red Flashing	Blue/Brown Active
Supply Voltage out of spec	Flashing Red	N/A

NOTE: The lock sensor is an optical device that senses the presence of the locking cam.
Reflectivity of the locking cam material can affect sensing.
Keyed cylinder can affect sensing.
Removal of the factory installed keyed cylinder will void warranty.

RF Exposure Warning: The equipment complies with RF exposure limits set forth for an uncontrolled environment. The antenna(s) used for this transmitter must not be co-located or operating in conjunction with any other antenna or transmitter.

You are cautioned that changes or modifications not expressly approved by the party responsible for compliance could void your authority to operate the equipment.

FCC Compliance Statement

This equipment has been tested and found to comply with the limits for a Class B digital device, pursuant to part 15 of the FCC rules. These limits are designed to provide reasonable protection against harmful interference in a residential installation. This equipment generates, uses and can radiate radio frequency energy and, if not installed and used in accordance with the instructions, may cause harmful interference to radio communications. However, there is no guarantee that interference will not occur in a particular installation. If this equipment does cause harmful interference to radio or television reception, which can be determined by turning the equipment off and on, the user is encouraged to try to correct the interference by one or more of the following measures:

- Reorient or relocate the receiving antenna.
- Increase the separation between the equipment & receiver.
- Connect the equipment into an outlet on a circuit different from that to which the receiver is connected.
- Consult the dealer or an experienced radio/TV technician for help.

FCC Caution: This device complies with Part 15 of the FCC Rules. Operation is subject to the following two conditions:

1. This device may not cause harmful interference and
2. This device must accept any interference received, including interference that may cause undesired operation.

Industry Canada Compliance Statement

This digital apparatus does not exceed the Class B limits for radio noise emissions from digital apparatus as set out in the interference-causing equipment standard entitled “Digital Apparatus,” ICES-003 of Industry Canada.

Cet appareil numérique respecte les limites de bruits radioélectriques applicables aux appareils numériques de Classe B prescrites dans la norme sur le material brouilleur: “Appareils Numériques,” NMB-003 édictée par l’Industrie.

© 2015 RUTHERFORD CONTROLS INT’L | A DORMA GROUP COMPANY
WWW.RUTHERFORDCONTROLS.COM • PHONE: 1.800.265.6630 • FAX: 1.800.482.9795 • E-MAIL: SALES@RUTHERFORDCONTROLS.COM