# INSTALLATION 3525

## 3525 Electronic Locking Rack Handle

RUTHERFORD CONTROLS
A DORMA Group Company

*In or Out... we make it Easy!®*

### Package Contents

- 3525 Electronic Locking Rack Handle
- 78.7″ (2000 mm) Wire Harness
- M3x25mm Long Mounting Screws (qty 4)
- M3x14mm Long Mounting Screw
- Rotation Limiter
- CAM Bolt
- Top Mounting Bracket
- Bottom Mounting Bracket
- IS3525 Installation Instructions
- Keys (qty 3)

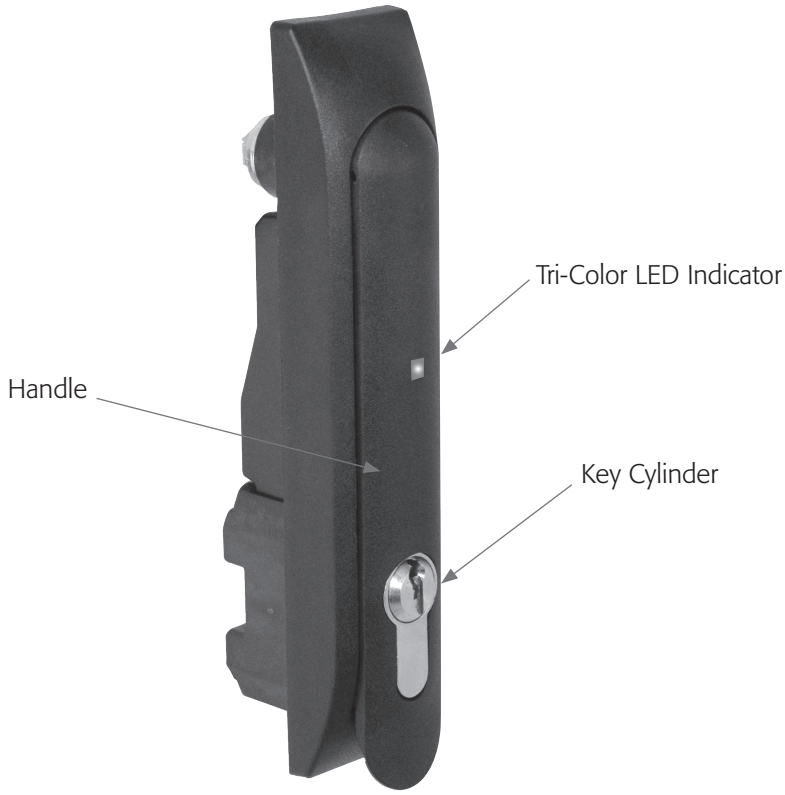


### Specifications

| | |
|---|---|
| Voltage: | 12VDC to 24VDC (NOTE: Status LED will blink red if the supply voltage is out of range.) |
| Standby Current: | 50mA maximum at 12VDC |
| Operating Current: | 200mA maximum at 12VDC (with no external mechanical load applied to handle) |
| Operating Transit Time: | 1 second maximum (NOTE: Power must be present during transit times. If power is removed while the lock slide is moving to the unlock position, then the control input signal must be asserted again. If power is removed while the lock slide is moving to the lock position, it will complete it's cycle when power is restored.) |
| Electronic Unlock Time: | 3 seconds minimum |
| Alarm Outputs: | 100mA/output maximum |
| Overall Dimensions: | 6.71″ H x 1.45″ W x 1.98″ D (170.6 x 37 x 50.25mm) |


© 2015 RUTHERFORD CONTROLS INT'L | A DORMA GROUP COMPANY
WWW.RUTHERFORDCONTROLS.COM • PHONE: 1.800.265.6630 • FAX: 1.800.482.9795 • E-MAIL: SALES@RUTHERFORDCONTROLS.COM

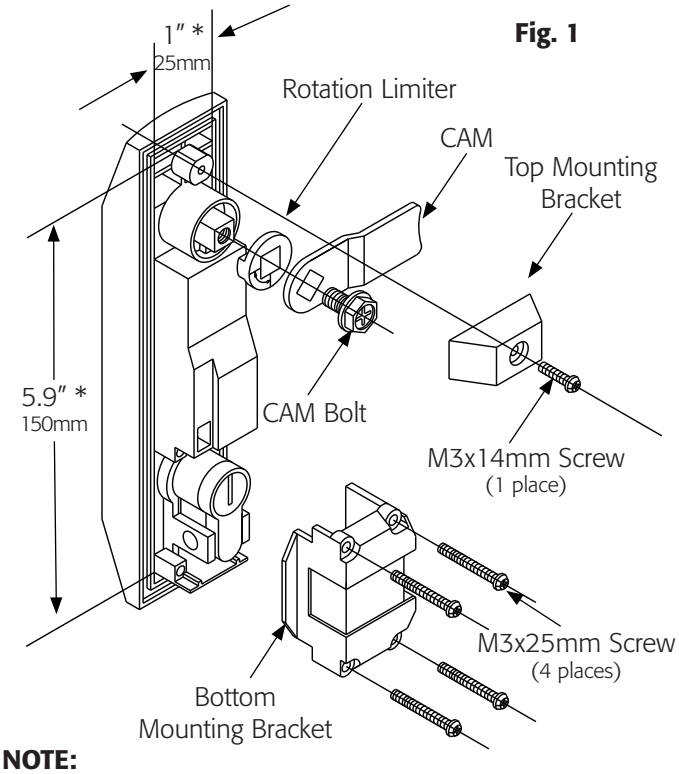


**Fig. 1**

**NOTE:**

* 1) Cut-out dimensions.

2) Handing is determined by rotation limiter and bottom mounting bracket.

### Handle Mounting

1. Assemble handle according to the proper handing required.
2. Rotation Limiter and Bottom Mounting bracket determine handing.
3. If existing cam or rod mechanism are installed on original handle remove and install on new handle.
4. Ensure the proper cutout in the door. (See Fig. 1)
5. Install handle though cutout and install top & bottom mounting brackets.
6. Install wiring harness and route to hinge side of door securing in place to ensure that nothing will bind or catch.
7. Proceed to wiring. (See Fig. 2)

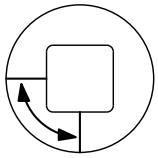

**Rotation Limiter**
Viewed from back.
Handle rotation is counter clockwise from front.

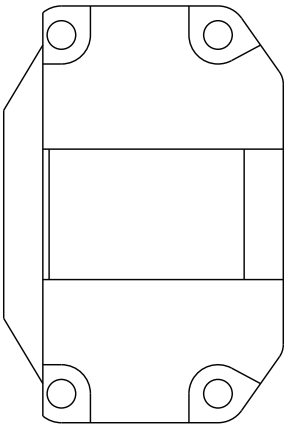

**Bottom Mounting Bracket**
Viewed from back.
Key rotation is counter clockwise from front.

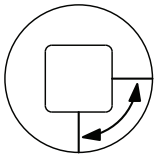

**Rotation Limiter**
Viewed from back.
Handle rotation is clockwise from front.

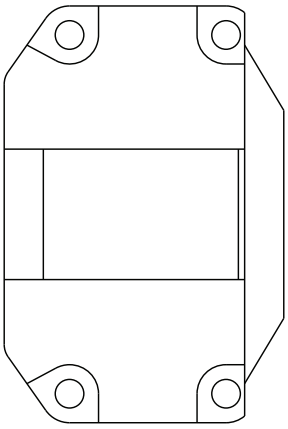

**Bottom Mounting Bracket**
Viewed from back.
Key rotation is clockwise from front.

© 2015 RUTHERFORD CONTROLS INT'L | A DORMA GROUP COMPANY

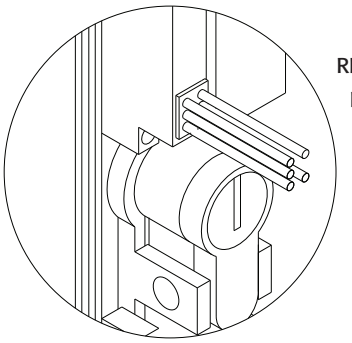

**RED:** Postive
**BLACK:** Negative
**ORANGE:** Activation Trigger
**YELLOW:** 100mA Output for Alarm
**BROWN:** 100mA Output for Alarm

**Fig. 2**

### Wiring

1. Red & Black are 12 to 24 VDC input voltage.
2. Orange is a positive input with a Normally Open Switch. The lock will unlock for a minimum of 3 seconds on a momentary activation (50 millisecond min.) or remain unlocked as long as the circuit is closed.
3. Yellow is an alarm that will activate when the key is used to unlock the cabinet or anytime the handle is not seated and locked.
4. Brown is an alarm that will activate when the lock is electrically activated and will remain on until the lock electrically relocks.

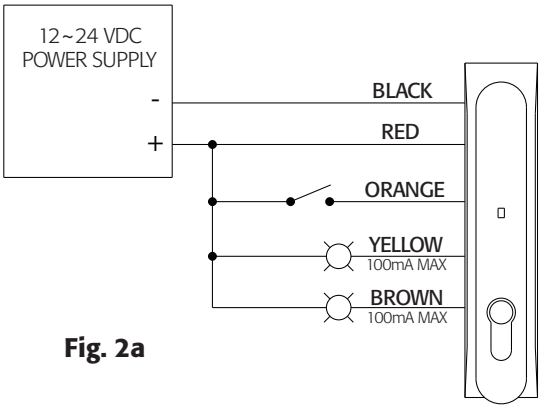


**Fig. 2a**

| Lock Status | Latch LED | Alarm Wires |
|---|---|---|
| Secure | Steady Blue | Inactive |
| Electrically Released | Blue/ Magenta Flashing | Brown Active |
| Mechanically Released | Blue Flashing | Yellow Active |
| Handle Not Fully Closed | Blue/Red Flashing | Yellow/Brown Active |

**NOTE:** The lock sensor is an optical device that senses the presence of the locking cam.
Reflectivity of the locking cam material can affect sensing.
Keyed cylinder can affect sensing.
**Removal of the factory installed keyed cylinder will void warranty.**

© 2015 RUTHERFORD CONTROLS INT'L | A DORMA GROUP COMPANY
WWW.RUTHERFORDCONTROLS.COM • PHONE: 1.800.265.6630 • FAX: 1.800.482.9795 • E-MAIL: SALES@RUTHERFORDCONTROLS.COM