INSTALLATION

12/24VDC 3513-DM

Dual Monitor Cabinet Lock

RUTHERFORD CONTROLS
A DORMA Group Company

In or Out... we make it Easy!®

Instructions For Lock Mode Change

1. Remove the 2 screws on the bottom.
2. Remove base plate and solenoid.
3. Turn assembly 180º and install into housing.

   WARNING: Care should be taken to prevent damage to switch lever.
4. Insert the two screws.

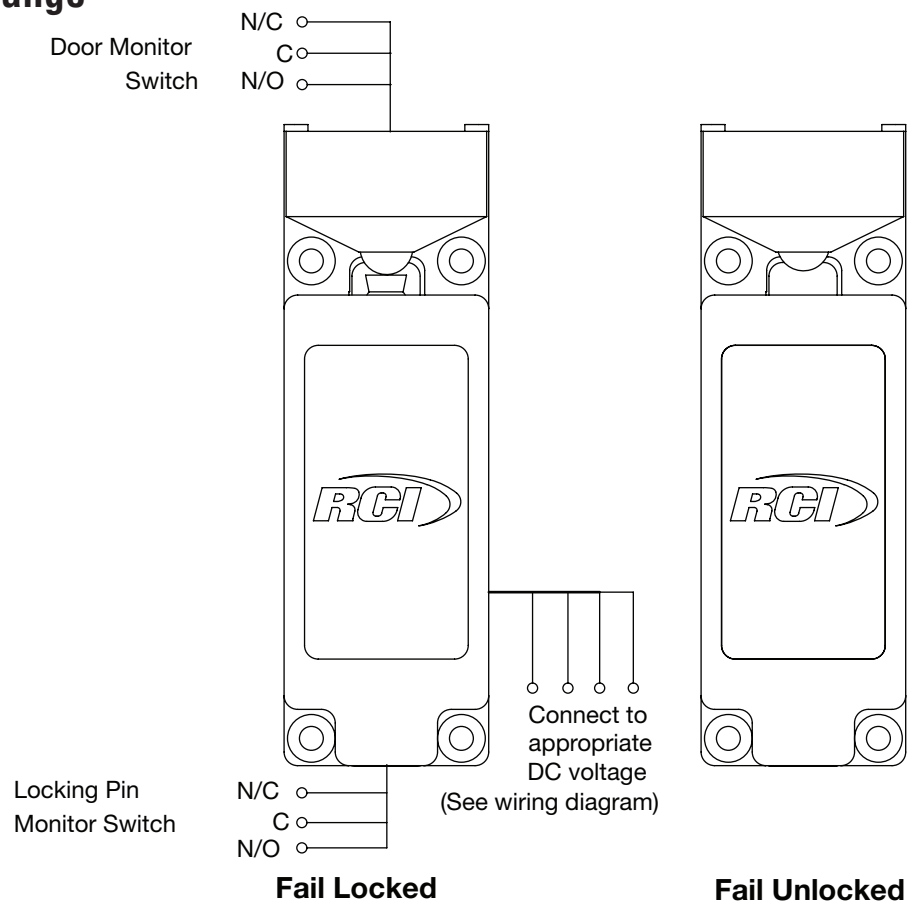

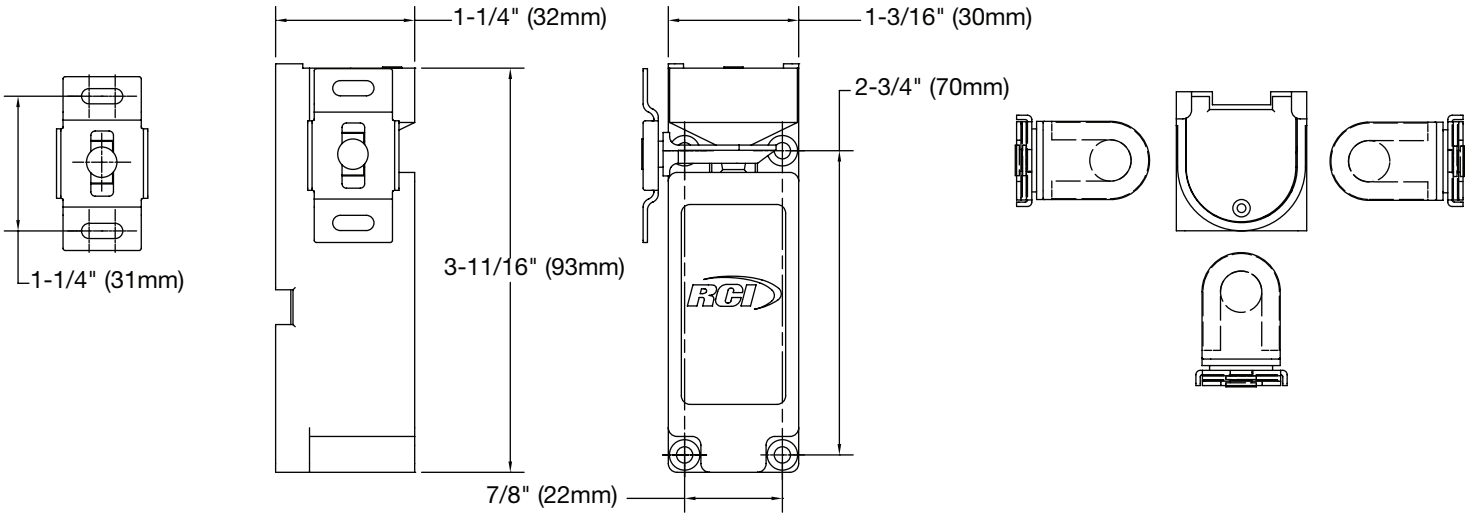

©2013 RUTHERFORD CONTROLS • WWW.RUTHERFORDCONTROLS.COM
USA: 2517 SQUADRON COURT, SUITE 104, VIRGINIA BEACH, VA 23453 • CANADA: 210 SHEARSON CRESCENT, CAMBRIDGE, ON N1T 1J6
PHONE • 1.800.265.6630 • 519.621.7651 • FAX: 1.800.482.9795 • 519.621.7939 • E-MAIL: SALES@RUTHERFORDCONTROLS.COM

3513-DM Installation Instructions (Continued)

Installation Dimensions

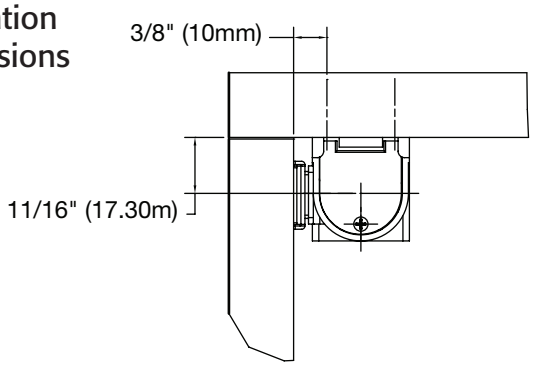

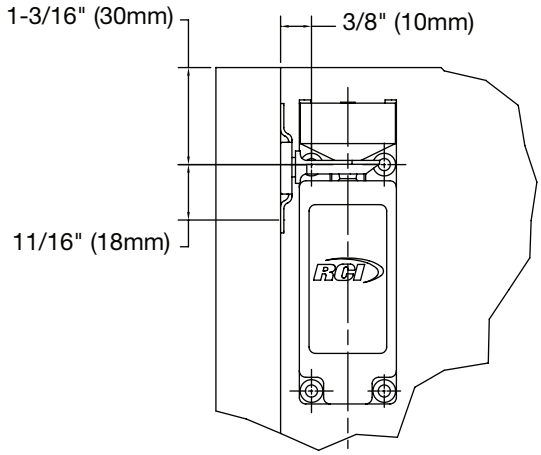

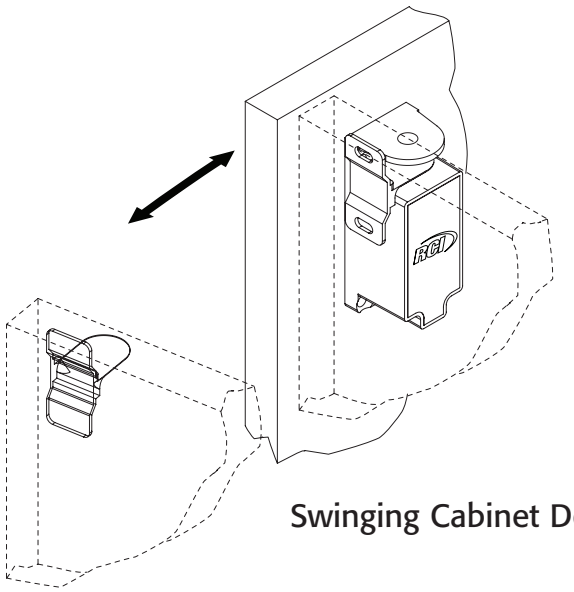

Swinging Cabinet Door

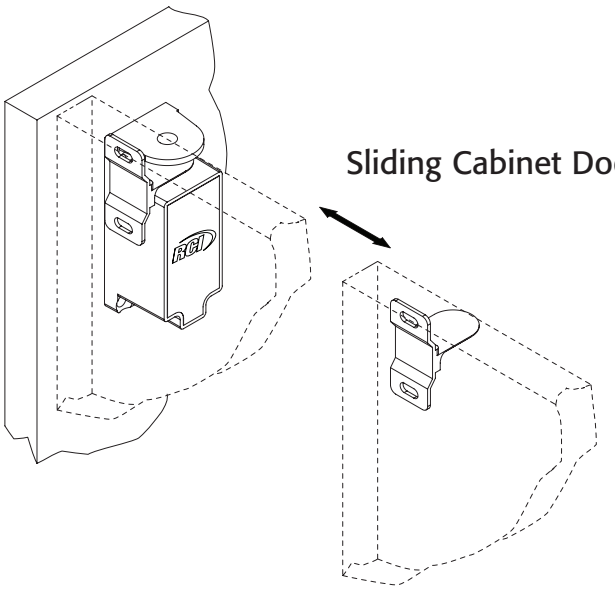

Sliding Cabinet Door

Parts Checklist

QTY	Description
4	Flat Head Wood Screws
2	Pan Head Wood Screws

1. Locking Pin Monitor Switch Wiring Diagram

125VAC; 1A / 30VDC; 0.5A

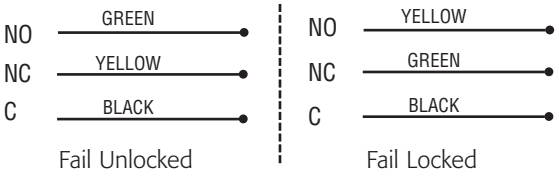

2. Door Monitor Switch Wiring Diagram

125VAC; 3A / 30VDC; 2A



3. Cabinet Lock Dual Voltage Wiring Diagram

12VDC (200mA)

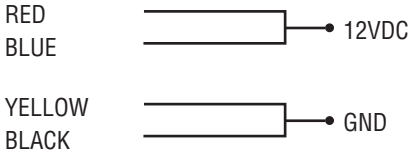

4. Cabinet Lock Dual Voltage Wiring Diagram

24VDC (100mA)



©2013 RUTHERFORD CONTROLS • WWW.RUTHERFORDCONTROLS.COM
USA: 2517 SQUADRON COURT, SUITE 104, VIRGINIA BEACH, VA 23453 • CANADA: 210 SHEARSON CRESCENT, CAMBRIDGE, ON N1T 1J6
PHONE • 1.800.265.6630 • 519.621.7651 • FAX: 1.800.482.9795 • 519.621.7939 • E-MAIL: SALES@RUTHERFORDCONTROLS.COM