INSTALLATION

12/24VDC 3513

Cabinet Locks

RUTHERFORD CONTROLS
A DORMA Group Company

In or Out... we make it Easy!®

Instructions For Lock Mode Change

1. Remove the 4 screws on the bottom.
2. Remove base plate and solenoid.
3. Turn assembly 180° and re-route wires to cut out.
4. Install into housing and insert the 4 screws.

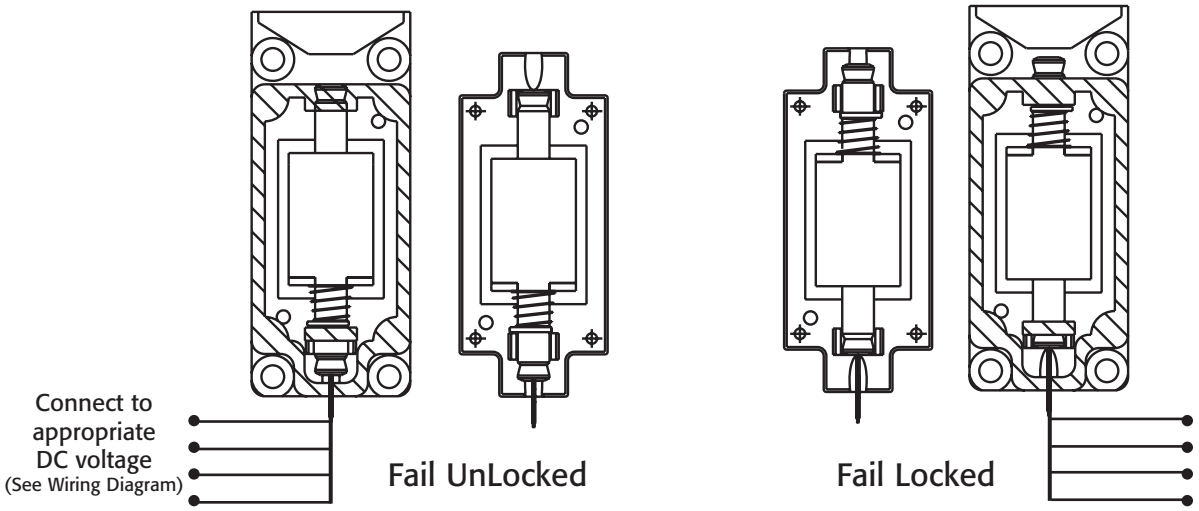

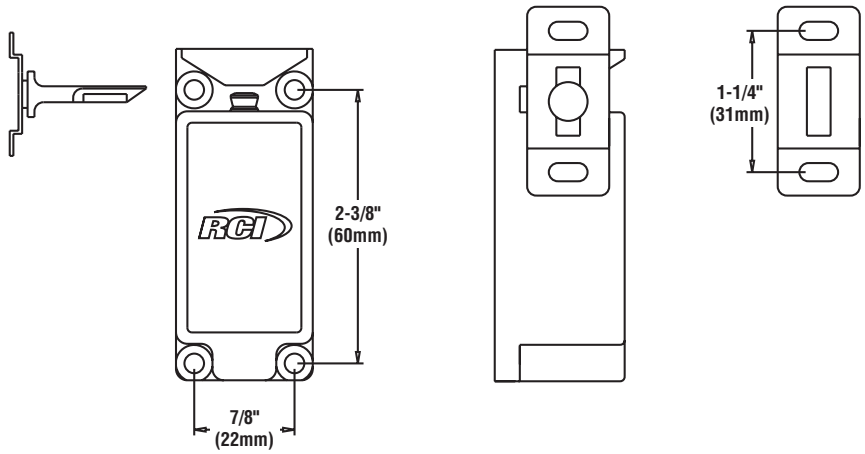

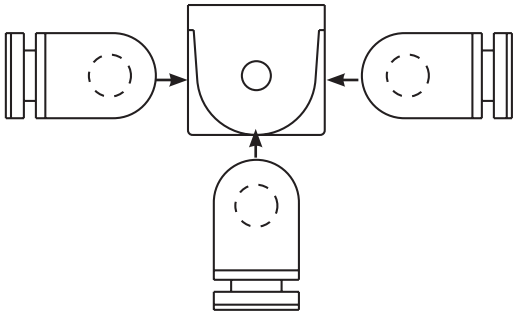

©2013 RUTHERFORD CONTROLS • WWW.RUTHERFORDCONTROLS.COM
USA: 2517 SQUADRON COURT, SUITE 104, VIRGINIA BEACH, VA 23453 • CANADA: 210 SHEARSON CRESCENT, CAMBRIDGE, ON N1T 1J6
PHONE • 1.800.265.6630 • 519.621.7651 • FAX: 1.800.482.9795 • 519.621.7939 • E-MAIL: SALES@RUTHERFORDCONTROLS.COM

3513 Installation Instructions (Continued)

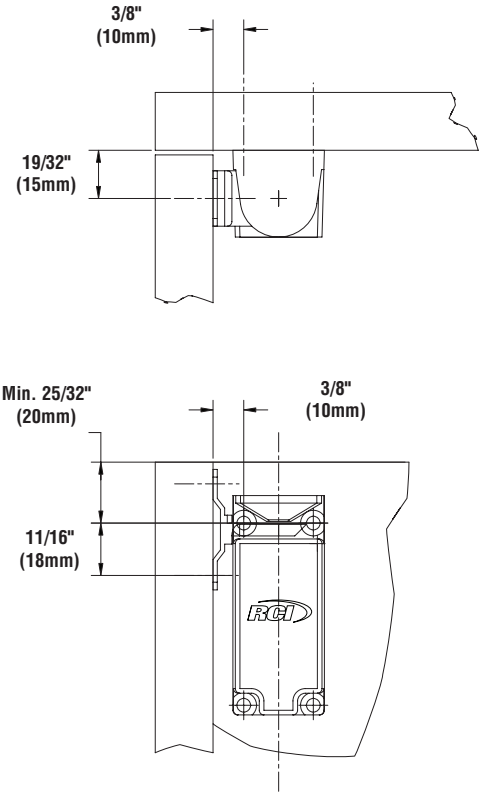

Installation Dimensions

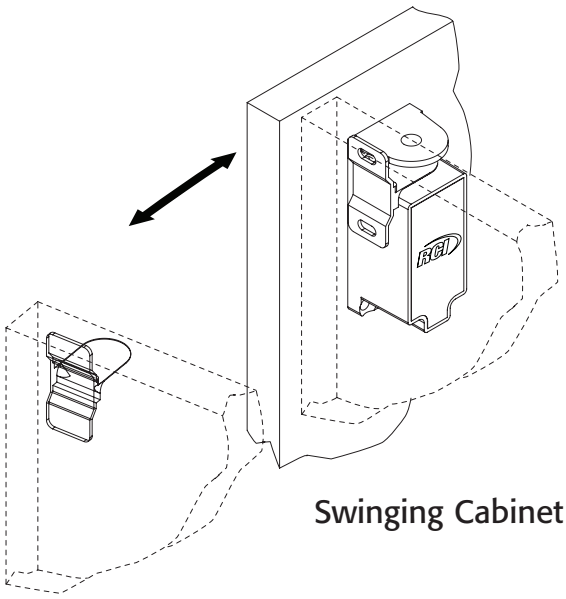

Swinging Cabinet Door

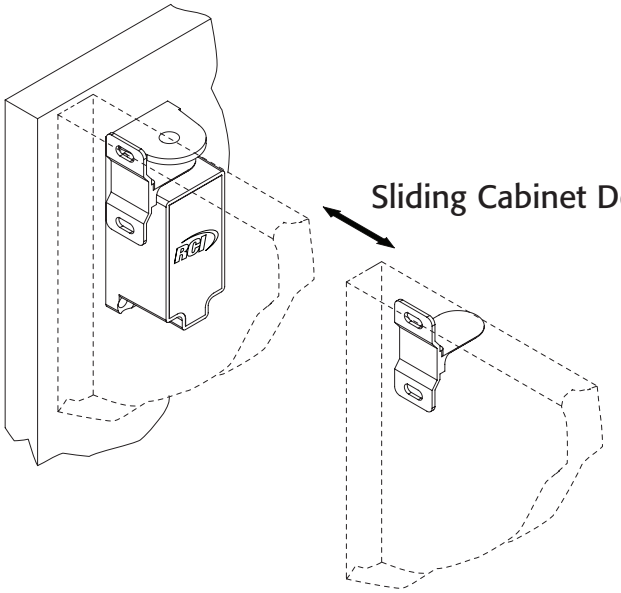

Sliding Cabinet Door

Parts Checklist

QTY	Description
4	Flat Head Wood Screws
2	Pan Head Wood Screws

Cabinet Lock Dual Voltage Wiring Diagram

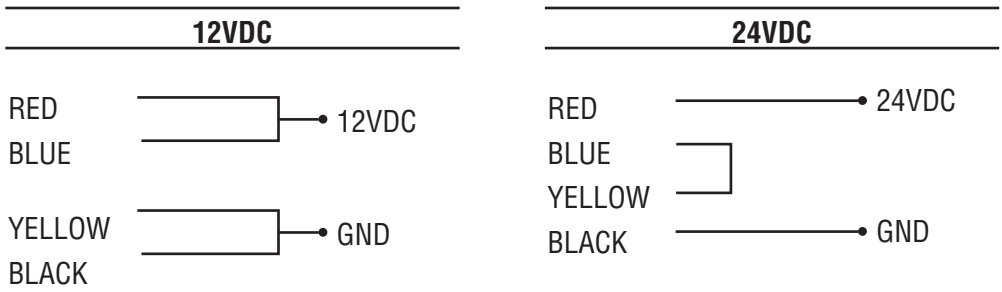

©2013 RUTHERFORD CONTROLS • WWW.RUTHERFORDCONTROLS.COM
USA: 2517 SQUADRON COURT, SUITE 104, VIRGINIA BEACH, VA 23453 • CANADA: 210 SHEARSON CRESCENT, CAMBRIDGE, ON N1T 1J6
PHONE • 1.800.265.6630 • 519.621.7651 • FAX: 1.800.482.9795 • 519.621.7939• E-MAIL: SALES@RUTHERFORDCONTROLS.COM