INSTALLATION

3510/3510MS

Cabinet Lock

Electric Lock for Small Enclosures

RUTHERFORD CONTROLS
A DORMA Group Company

In or Out...we make it Easy!®

Instructions

1. Connecting wire should be of sufficient gauge to prevent line loss.
   The 3510 Cabinet Lock operates on either 12 or 24 VAC/DC
   For 12 volt operation, two wire jumpers are required for terminal 1 to 2 and terminal 3 to 4.
   For 24 volt operation, only one wire jumper is needed for terminal 2 to 3.

2. With voltage jumpers installed, connect the positive (+) lead from the power supply to terminal 1.
   Connect the negative(-) lead from the power supply to terminal 4.
   For DC voltage, the supplied diode must be connected across terminals 1 and 4.
   NOTE: For AC voltage, terminal 1 and 4 connections are not polarity conscious (without diode).

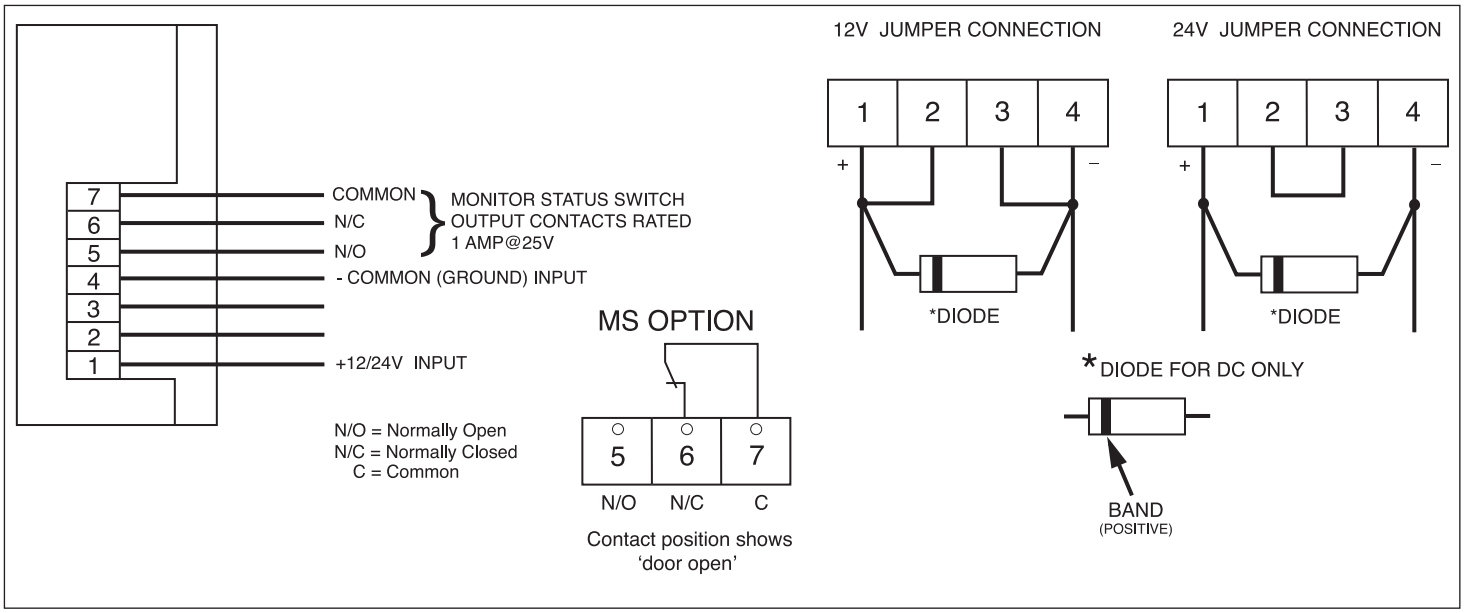

Optional MS - Monitor Switch

The monitor switch indicates whether the door is closed/locked or open/unlocked.

The monitor switch contacts are rated 1 Amp @ 25V maximum.

©2014 RUTHERFORD CONTROLS • WWW.RUTHERFORDCONTROLS.COM

USA: 2517 SQUADRON COURT, SUITE 104, VIRGINIA BEACH, VA 23453 • CANADA: 210 SHEARSON CRESCENT, CAMBRIDGE, ON N1T 1J6
PHONE: 1.800.265.6630 519.621.7651 • FAX: 1-800482-9795 519.621.7939 • E-MAIL: SALES@RUTHERFORDCONTROLS.COM

PCN13090
R01/14CA

Mounting Instructions

1. Two symbols are located on the rosette that define failed locked or fail unlocked.

To set lock mode, align the rosette symbol with the arrow on the lock.

Make sure to use the fail unlocked position for initial mounting and alignment.

Without power, the fail locked mode cannot open.

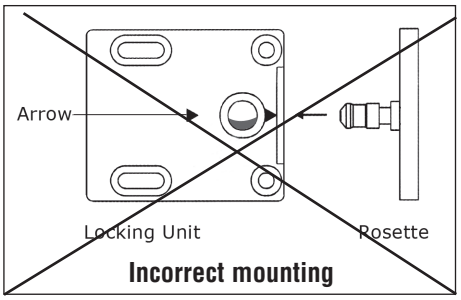

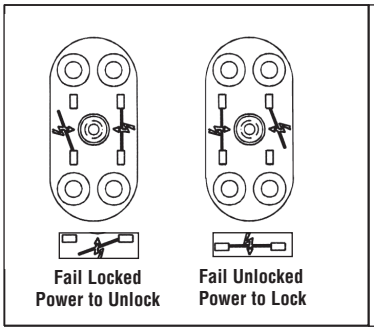

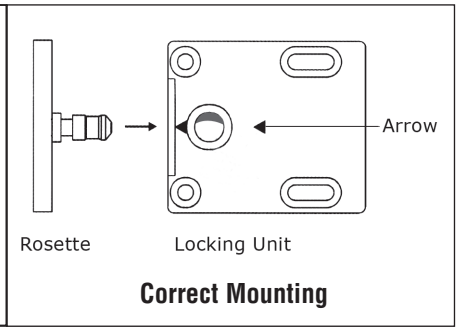

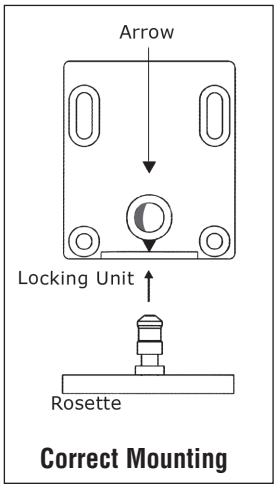

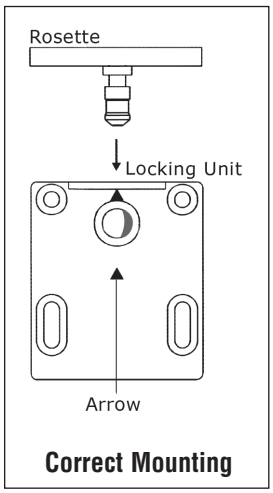

2. Using the cut-out template, mount the locking unit to the fixed portion of the cabinet or drawer with the four #6 x 1-1/4" PH SMS screws.
   Typical installations are shown below.
   The locking unit and rosette must be aligned as shown.

3. Peel the white side of the adhesive tape and apply to the back of the rosette.
   Engage rosette into the mounted locking unit in the fail unlocked position.
   Peel green side of adhesive tape.
   Close and open cabinet door or drawer.
   The rosette will be attached in the correct location.
   For fail unlocked, simply secure the rosette with the four #6 x 1/2" PH SMS screws.
   For fail locked turn rosette 180˚ and secure.

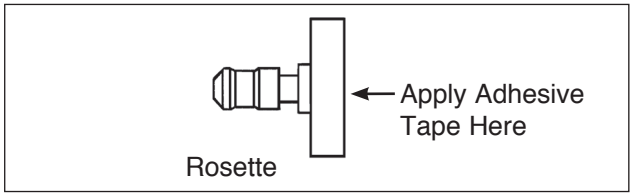

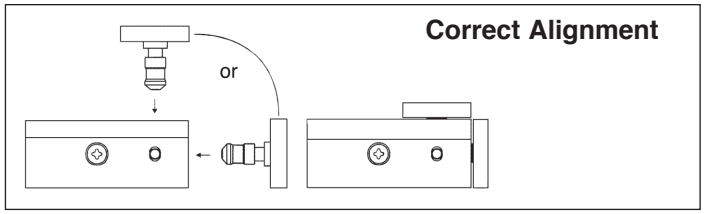

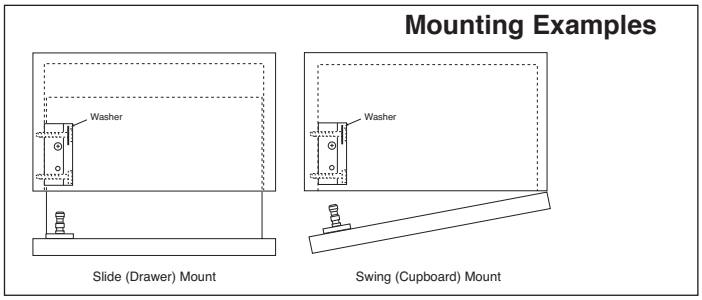

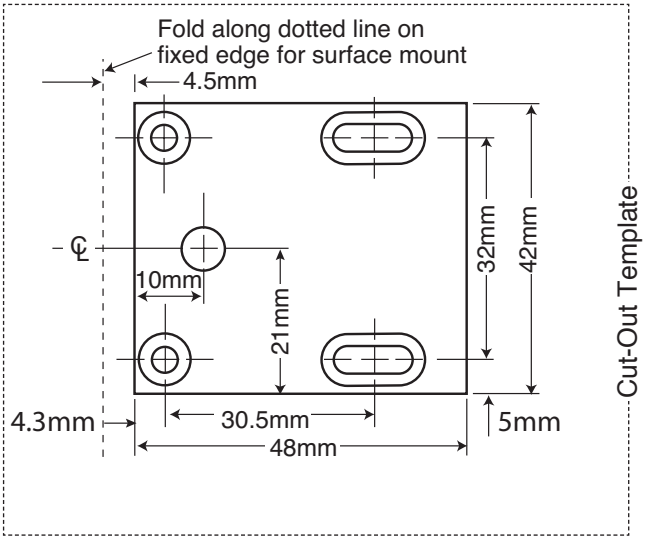

©2014 RUTHERFORD CONTROLS • WWW.RUTHERFORDCONTROLS.COM
USA: 2517 SQUADRON COURT, SUITE 104, VIRGINIA BEACH, VA 23453 • CANADA: 210 SHEARSON CRESCENT, CAMBRIDGE, ON N1T 1J6
PHONE: 1.800.265.6630 519.621.7651 • FAX: 1-800482-9795 519.621.7939 • E-MAIL: SALES@RUTHERFORDCONTROLS.COM