INSTALLATION 12C

Compact Electric Strike

RUTHERFORD CONTROLS
A DORMA Group Company

The 12C Compact Electric Strike is one of the smallest and most versatile strikes in the world today and is suitable for all types of door frames. Designed to replace the mechanical strike plate. Minimal effort is required when installing the unit and the compact size assists with maintaining the integrity and strength of the door frame.

The 12C can be mounted on the right or left hand side of a frame and operates in Fail-Secure mode only. The compact strike is exclusively designed to retrofit "T" Strike applications.

Wiring And Current Draw

The control circuit for the door strike is not polarity sensitive.

~90mA@12V DC current draw

Continuously rated solenoid

NOTE: The product must not be installed in applications where it will be exposed to wind and weather (external gates etc.).

Metal Frame

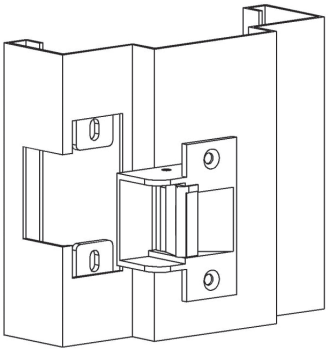

Wood Frame

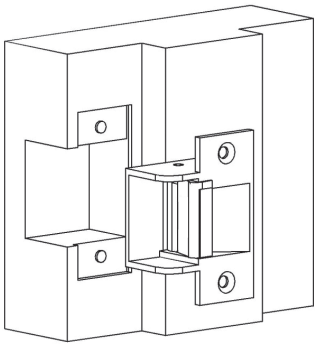

Dimensions

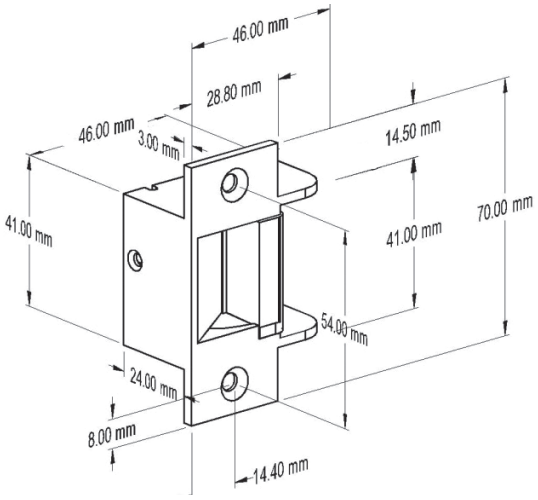

Door Latch Position

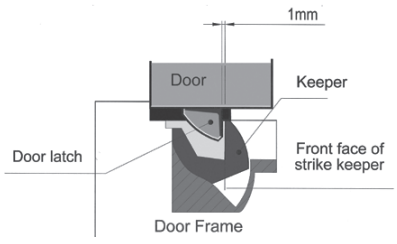

As drawn in the diagram, there should be a 1mm gap between the door latch and the front face of the strike keeper, preventing the door from creating back pressure on the strike keeper when the door is closed. This gap is important to ensure the proper functioning of the strike.

© 2016 RUTHERFORD CONTROLS INT'L | A DORMA GROUP COMPANY