RUTHERFORD CONTROLS

In or Out... we make it Easy!®

10-5 Series

Class 2 Power Limited
Power Supply c/w Charging

Installation and Specifications Manual

Base Features

- Universal AC input from 120-240 VAC providing exceptional brownout protection
- Field selectable 12VDC and 24VDC output via slide switch
- Surge protected input and output voltage
- AC and DC visual indication
- Precise battery regulation for lead acid batteries
- Online batteries for no drop switch over on AC failure
- Form C relays to monitor AC failure and low battery condition

See specifications below for more details.

Installation Instructions

1. Mount the power supply in an accessible location using the mounting keyholes in the back of the box.

Note: The RCI 10-5 Power Supply is for use in a controlled environment. Installation must be in accordance with the National and Local Building and Fire Codes. Check with the Authority Having Jurisdiction (AHJ) for details prior to installation.

2. Remove AC input shroud and route AC power through the knockout located under the high voltage shroud and connect to the power input terminals as marked (See Fig. 1).

3. Run wiring for devices to be powered through panel knockouts as required and connect to DC output terminals.

Note: Ensure all wiring is of appropriate gauge for device being powered. All Power Limited circuits must be routed a minimum of .25" from Non-power Limited circuits.

4. Set DC output voltage selector switch to desired voltage PRIOR TO CONNECTING BATTERY AND ENERGIZING AC INPUT VOLTAGE (See Fig. 2).

5. Apply power to AC input terminals and test DC outputs for proper operation.

6. Connect backup battery(s) to battery leads if required using the supplied cables that are suitable to the installation.

Note: Do not exceed maximum output of Power Supply.

FIG. 1- AC Input shroud removal
Note: Wiring of power limited and non-power limited circuits must be separated a minimum of .25".

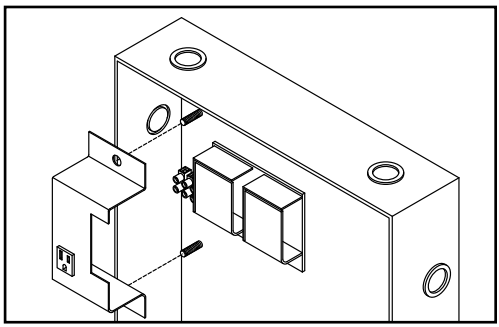

Fig. 2– 10-5 Power Supply Circuit Board

Lead acid batteries are typically used for stand by power in security applications, as they float charge well and have no usage memory. When float charged, they typically last 4-5 years. A precision power supply/charger will provide the proper voltage for any given temperature regardless of load. This is what provides long battery life from the RCI 10-5 power supply.

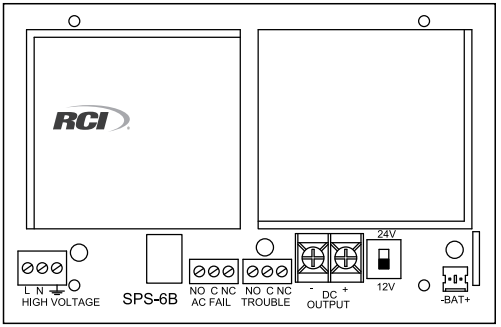

Fig. 3 -Power Supply Wiring

Note: Maintain a minimum clearance of .25" between power limited and non-power limited circuits

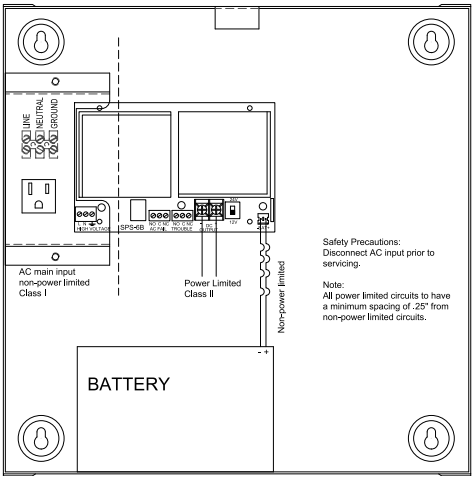

Specifications

Note: For UL listed power supply

Input

- ► AC input 120VAC/60Hz or 240VAC/50Hz
  Automatic switching
- ► AC visual indicator

Output

- ► Nominal Output Voltage 12VDC or 24VDC
- ► Typical Output Voltage 12VDC nominal, 10.4-13.7VDC, 5A
  24VDC nominal, 22.7-25.2VDC, 3A

  Note: Typical voltage measured without load.
- ► 5 Amps supply current at 12VDC
  3 Amps supply current at 24VDC
- ► Class II Power limited thermally protected DC output
- ► Visual indication

Battery Backup

- ► Tested for use with UL 1034 listed locking devices only
  5Amps @ 1 hour standby time using 7.5Ah battery(s)
- ► Fully integrated charging circuit
- ► Automatic resetting battery over current protection
- ► Reverse hookup protection .9A PTC
- ► Average recharge current 735ma
- ► LED visual indicator

Supervision

- ► Form “C” AC fail relay output 2A @ 120VAC
- ► Form “C” battery trouble relay output 2A @ 120VAC
- ► Internal battery cut-off relay to protect batteries from deep discharge 9.8VDC & 19.6VDC
- ► Enclosure tamper switch for connection to a UL approved burglary panel when used in UL 603 applications

Environmental

- ► For indoor use only
- ► Operating temperature -0˚C to 49˚C - (32˚F to 120˚F)

Maintenance

- ► Under normal conditions the power supply should be checked for proper operation on an annual basis
- ► Check output voltage
- ► It is also recommended that the current draw is checked to ensure that the current is within specifications. Check battery voltage. Under normal conditions the battery will last approximately 4-5 years. If battery backup is critical it is recommended to change the battery every 4 years or less.

Troubleshooting Guide

Problem	Solution
No DC output from terminals.	- Check AC and DC LED’s on power supply board. Both should be on for proper operation AC ON –GREEN, Trouble: Normal – AMBER, DC ON - RED. - If LED’s are not on, check AC power.
Output voltage is not correct for the connected equipment.	- Disconnect AC power, battery(s) and all connected equipment IMMEDIATELY. - Change voltage selection switch to desired voltage. - Reconnect equipment and reapply AC power.
Trouble output relay is de-energized. (Relay terminals are labeled shown in the Normal, energized, “no trouble” condition. Relays are energized when no trouble is detected.	-Check battery voltage.

For Technical Support:

1-800-265-6630 or 519-621-7651 www.rutherfordcontrols.com

©2011 RUTHERFORD CONTROLS INT’L CORP. • WWW.RUTHERFORDCONTROLS.COM

USA: 2517 SQUADRON COURT, SUITE 104, VIRGINIA BEACH, VA 23453
CANADA: 210 SHEARSON CRESCENT, CAMBRIDGE, ON N1T 1J6
PHONE:1.800.265.6630 • 519.621.7651 • FAX: 519.621.7939 • E-MAIL: SALES@RUTHERFORDCONTROLS.COM