RUTHERFORD CONTROLS

In or Out... we make it Easy!™

PDD-8PCI

Power Distribution Board
With Supervised Interface

Installation and Specifications Manual

Details

The PDD-8PCI board is a power distribution/control interface. This board can be used to convert a non-power limited DC power source to 8 Class II power limited outputs that can be controlled by a fire alarm control panel. Each output can be selectively set to turn ON, OFF, or remain unchanged when the fire alarm control panel triggers the board.

Features

- 8 class II Power Limited Outputs with Auto-Resetting Circuit Breakers
- Each Output is Individually Selectable to turn On, turn Off, or Always On when Triggered
- Outputs can be Triggered with:
    1. Voltage or Reverse Polarity (opto isolated)
    2. N/O or N/C Switch with Supervised EOL
- Form C Contacts (TRIGGERED) and Red LED (TRG) Indicate Trigger Status
- Form C Contacts (TROUBLE) and Green LED (TRB)
- Indicate:
    1. One of the Output Circuit Breakers is Tripped
    2. Main Fuse Blown or no Power on Input
- Universal 11-29VDC Operation
- Each Output Pair has a Removable Terminal Block
- Each Output has a Green Status LED
- Main Power has Green Status LED
- Main Power Pull and Fuse
- Limited Lifetime Warranty

Installation Instructions

1. Mount the PDD-8PCI board in a suitable location in close proximity to the power supply.

Note:

a) As this device is used to power multiple devices ensure that all wiring is of an appropriate gauge for the devices being installed.

b) The RCI PDD-8PCI board is for use in a controlled environment. Installation must be in accordance with local building and fire codes. Check with Authority Having Jurisdiction (AHJ) for details prior to installing.

c) All power limited wiring must be a minimum of .25” from non-power limited wiring.

2. Connect “MAIN” terminals to output of DC supply, paying close attention to polarity of DC output from power supply.

3. Connect devices to be powered to output terminals of PDD-8PCI control board, paying close attention to polarity requirements.

4. Set trigger jumpers (J1-J8) as required for each outputs connected device (See Fig. 1 Notes).

5. Connect fire alarm control panel to desired TRIGGER input terminals.

a) (See fire alarm control panel installation and operation manual for details about signaling requirements.)

b) (FIG'S 1-6 in this installation guide will provide details on wiring to the fire alarm control panel)

6. Connect any required monitoring equipment to the trouble and trigger relays using appropriate cabling.

7. The unit is to be powered from the model 10-5 power supply or a UL listed power limited supply.

8. Apply power to power supply to activate control board and test all connected devices.

Specifications

Note: For UL listed power supply

Input

- Input Voltage: 10.4-13.7 @ 12VDC, 22.7-25.2 @ 24VDC
- Typical Current Draw with no Output Load: 90-160mA

Output

- 12VDC nominal, 10.4-13.7 VDC, 5A
  24VDC nominal, 22.7-25.2 VDC, 3A
- 1-8 Continuous Duty rating: 1.23A each
- Current Overload Protection: Auto resetting PTC type

Note: Total output not exceed 5A @ 12VDC, 3A @ 24VDC

Monitor Inputs

- Voltage Trigger: MIN: 20% < Input voltage MAX: 30VDC
- EOL (End of Line) Trigger: Trigger at + or – 50% of 2.2K

Monitor Outputs

- Trouble Relay Rating: 2A @ 120VAC 1A @ 220VAC
- Trigger Relay Rating: 2A @ 120VAC 1A @ 220VAC

Environmental

- Product is not for use in outdoor environments

Description of PDD-8PCI Connections

Power Input (-MAIN+)

Main DC power input. These terminals can accept 11-30VDC and are polarity sensitive. The input voltage will be the same as the voltage on the output. Power limiting is not required. Wires connecting the MAIN terminals to the power supply must be sized appropriately for the total load connected to all outputs.

(-1 + through -8+)

Terminals 1-8 are outputs whose states may be changed by activation of the trigger input(s). Each of these paired output terminal blocks are Class II power limited and can be unplugged from the board for easy servicing. Each output is rated at 1.23A of continuous duty and controlled by an automatically resetable PTC circuit breaker. Jumpers J1-J8 determine the NORMAL and TRIGGERED states of these outputs (See jumper explanation for details.

Trigger Input (EOL)

End Of Line resistor terminal. When connecting a Fire Alarm Control Panel to the PDD-8PCI board the EOL terminals can be used to monitor this connection. Simply by installing the supplied 2.2K resistor at the relay in the Fire Panel the connecting wire can be supervised for faults. When the 2.2K EOL resistor changes by more than 50% due to either an open or a short, this trigger activates the trigger outputs. If the EOL trigger is not used the 2.2K resistor should be left on the terminals to keep the trigger at normal status.

Trigger Input (-DC+)

A DC voltage between 11 and 30VDC applied to this terminal pair with the indicated polarity will activate the trigger outputs. This output is fully isolated with an optical isolating relay and can be operated by a reverse polarity output from a fire control panel. The minimum input voltage for this trigger is 20% less than the main input supply voltage.

Trigger Output (N/C, C, N/O)

A triggered state is indicated by the de-activation of this relay if either of the Trigger inputs sense a state change. This relay is energized at all times when the PDD-8PCI is powered and the Trigger inputs are not in an alarm state. Upon a state change on the Trigger inputs the relay de-energizes, changing the state of the output contacts. (“Normal”, in this case, is the energized state.)

Trouble Output (N/C, C, N/O)

A trouble state is indicated by the de-activation of this relay if any one of the output PTC circuit breakers are triggered (short circuit), or if main power is lost due to power outage or main fuse failure. This relay is energized at all times when the PDD-8PCI board is powered. Upon initiation of a trouble sequence the relay de-energizes, changing the state of the output contacts. (“Normal”, in this case, is the energized state.)

FIG. 1

Note:
J1-J3 = NORM+
In the NORM+ position the output will be active when the PDD-8PCI is powered and will de-activate during a trigger condition.

J4-J5 = NO-TRIG
In the TRIG+ position the output will not be active when the PDD-8PCI is powered and will activate during a trigger condition

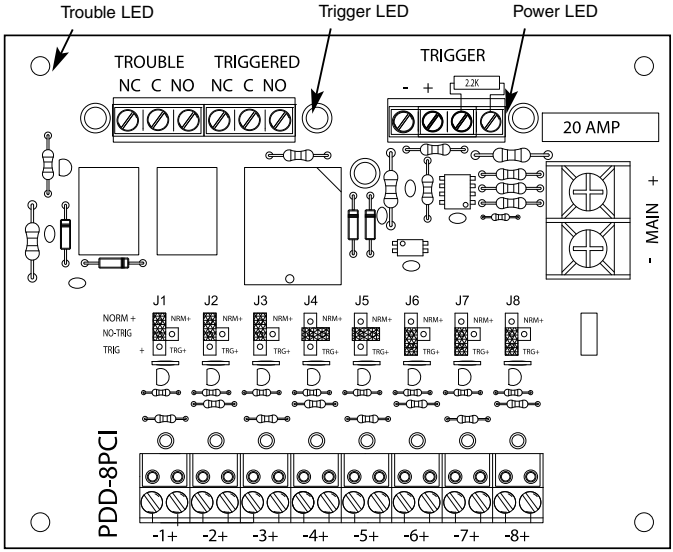

J6-J8 = TRIG+
In the NO-TRIG+ position the output will be active when the PDD-8PCI is powered and will remain activated during a trigger condition.

Application Diagrams

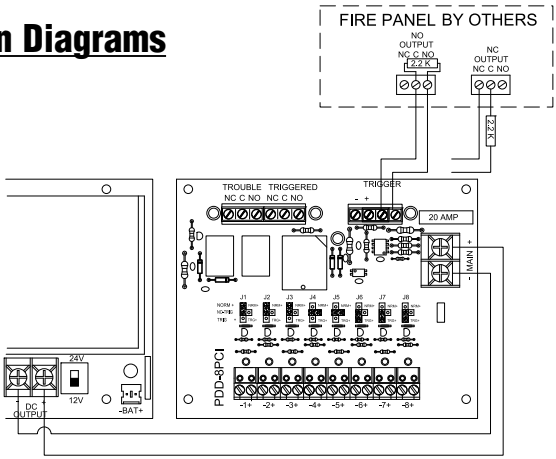

FIG. 2 - Fire Panel Connection for Non-Latching Automatic Reset Operation

This application illustrates how to connect the PDD-8PCI to a power supply for main input as well as a fire alarm control panel. If wired in this manner, trigger outputs will change state only as long as the fire alarm relay is active. When the fire alarm resets the PDD-8PCI outputs will also reset. (See next page).

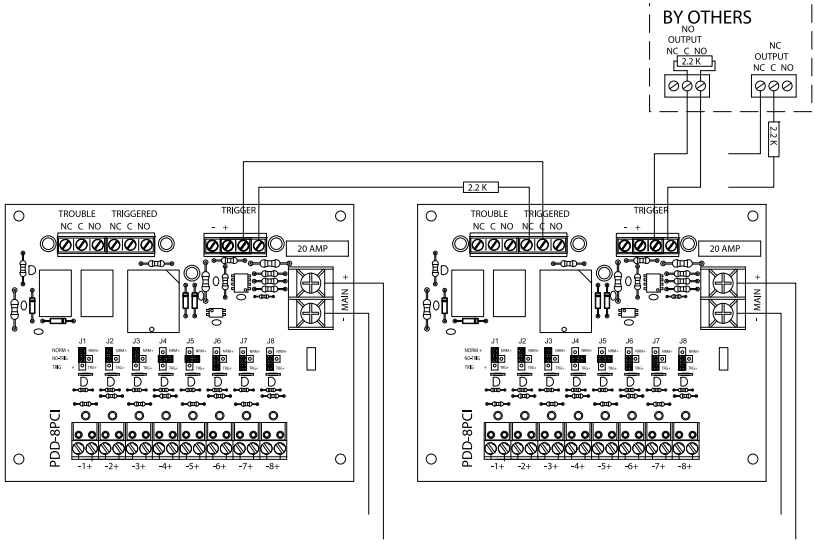

FIG. 3 - Fire Panel Connections for Non-Latching Automatic Reset Operation using Multiple PDD-8PCI

This application illustrates how to inter-connect multiple PDD-8PCI boards into a fire panel. When a fire alarm is detected each PDD-8PCI board will be in a triggered condition. When the fire alarm resets the PDD-8PCI outputs will also reset.

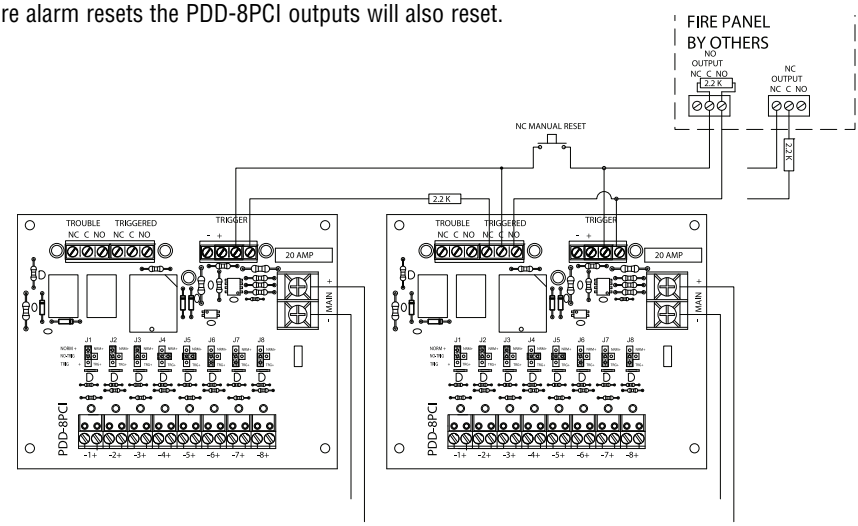

FIG. 4 - Fire Panel Connections for Latching Release with N/C Manual Reset Using Multiple PDD-8PCI

This application illustrates how to inter-connect multiple PDD-8PCI boards into a fire panel and latch the PDD-8PCI outputs. When a fire alarm is detected each PDD-8PCI board will go into a triggered condition and latch. When the fire alarm resets the PDD-8PCI boards will stay latched and must be manually reset with the N/C manual reset button.

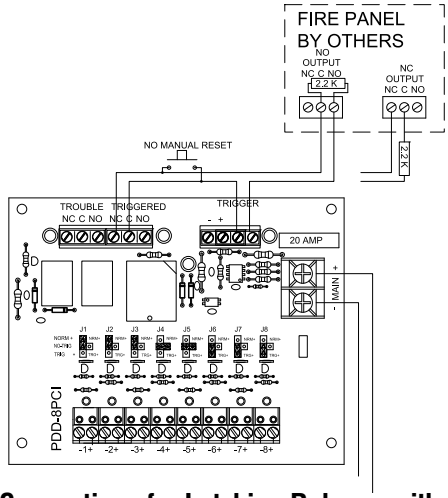

FIG.5 - Fire Panel Connections for Latching Release with N/O Manual Reset

This application illustrates how to connect a PDD-8PCI board into a fire panel and latch the PDD-8PCI outputs. When a fire alarm is detected the PDD-8PCI board will go into a triggered condition and latch. When the fire alarm resets the PDD-8PCI board will stay latched and must be manually reset with the N/O manual reset button.

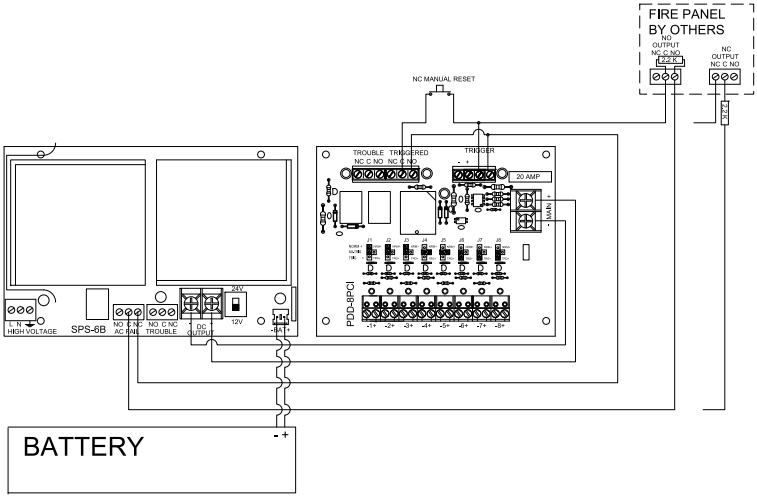

FIG. 6 - Fire Panel Connections for Latching AC Fail Release with N/C Manual Reset using Battery Backup.

This application illustrates how to connect the PDD-8PCI to a power supply for main input as well as a fire alarm control panel. If wired in this manner, trigger outputs will change state whenever the fire alarm relay activates or the AC power fails and remain latched in the triggered state until reset by activating the N/C switch. By connecting a battery to the system the PDD-8PCI can remove power from devices that require fail safe operation but allow other devices (keypads, card readers) to remain operational.

PDD-8PCI Series Troubleshooting Guide

Problem	Solution
No DC output from terminals.	- Check AC Power. - Check Power Supply for voltage output. - Check devices connected to outputs for a short circuit. (PTC's may require short to be removed for several minutes before automatically resetting). - Check trigger jumpers. Output LED should be lit if output is active.
Trigger is active and will not reset.	- Check for proper wiring connections on trigger connections. - Ensure that 2.2K resistor is installed at End of Line position in the wiring.
Trouble output relay is de-energized. (Relay terminals are labeled shown in the Normal, energized, "no trouble" condition. Relays are energized when no trouble is detected).	- Check devices connected to outputs for a short circuit. (PTC's may require short to be removed for several minutes before automatically resetting).

Notes

For Technical Support:

1-800-265-6630 or 519-621-7651 www.rutherfordcontrols.com

©2011 RUTHERFORD CONTROLS INT'L CORP. • WWW.RUTHERFORDCONTROLS.COM
USA: 2517 SQUADRON COURT, SUITE 104, VIRGINIA BEACH, VA 23453
CANADA: 210 SHEARSON CRESCENT, CAMBRIDGE, ON N1T 1J6
PHONE:1.800.265.6630 • 519.621.7651 • FAX: 519.621.7939 • E-MAIL: SALES@RUTHERFORDCONTROLS.COM