Installation Instructions For Spring Hinge Series: EC1105

Rev. 06/28/06

All steps must be followed to insure that the Hager Spring Hinge will function as designed.

INSTALLATION INSTRUCTIONS:

1. Install bearing hinge at top with spring hinges at center and bottom. There should be at least 1/4" (6mm) clearance at the bottom of the door for vacuum relief.
2. Open the door by hand to 90º angle, and push it closed. If the door latches, the hinges are ready to receive tension. If there is any resistance and the door does not latch, this indicates that the door is either out of balance or misaligned. This condition will have to be corrected before tension can be applied to the spring hinges.
3. Door weight should not exceed the recommended requirements. This includes all hardware and veneer.

SPRING HINGE ADJUSTMENT INSTRUCTIONS:

1. Install spring hinges in normal manner and oriented for right hand or left hand door.
2. Place door in closed position.
3. Insert Hex wrench in hex hole (Figure #1).
4. Rotate Hex wrench clockwise(while viewing from the adjustment end of hinge) to increase tension(Figure #2), and insert locking pin loosely in adjusting hole.
5. Release Hex wrench until locking pin contacts side of adjusting hole.
6. Remove Hex wrench and check the door closing force.
7. If closing force is not satisfactory, repeat steps 2 thru 6.

CAUTION #1: Use proper safety protection while installing the Hager Spring Hinge.
CAUTION #2: Door should be in closed position.
CAUTION #3: Do not adjust tension past three (3) holes when a 180º opening is required. Do not adjust tension past four (4) holes when a 90º opening is required.
CAUTION #4: On 3-1/2" x 3-1/2" – 1250 Series – maintain mortise depth at 0.119" (3mm).
CAUTION #5: Do not force.

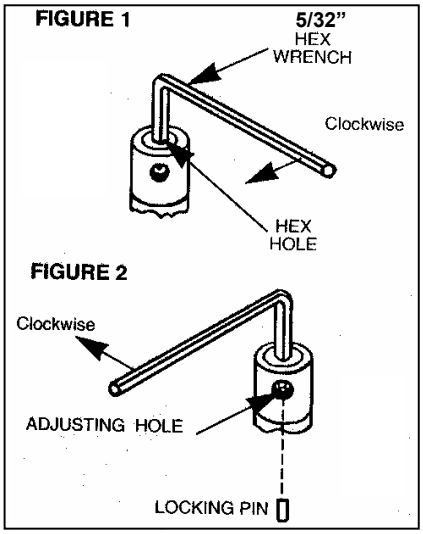

NOTE: Figure 1 & 2 views shown from the adjustment end of hinge.

EC 1105

SIZE	RECOMMENDED MAX. DOOR WEIGHT (LBS.)	BEARING HINGE	SPRING HINGE LOCATION
4-1/2" x 4-1/2"	70	2	1 CENTER
	115	1	2 CENTER/BOTTOM
	150	-	3 ALL

Conforms to standards approved by ANSI A 156.17.