5125, 5106, 5108, 5961 Heavy Duty Parallel Arm
I-CL00238 Installation Instructions
Meets ANSI A156.4

- Hollow-metal doors require channel or box-type reinforcement when thru-bolt mount is specified.
- Hold open arms are not permitted on fire doors.
- Sex-bolts may be required for wood or plastic faced fire door mounting.
- Minimum thickness recommended for reinforcements in hollow metal doors and frames: (12GA)
- Dimensions are based on standard doors and frames with 1/8" clearance, 5/8" stops, and square edge doors.

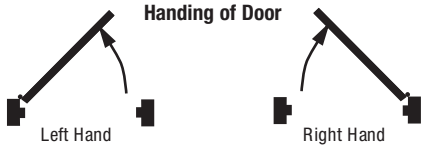

These door closers should NOT be installed on the exposed side (weather side) of exterior doors.

TOOLS REQUIRED

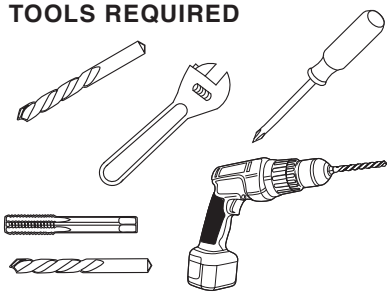

METAL

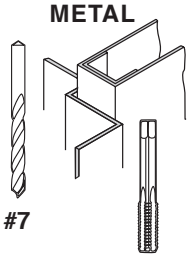

WOOD

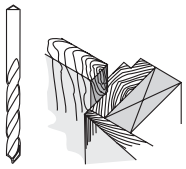

Self Drilling Screws Wood and Metal



For wood, drill 3/16" hole

Machine Screws



#7 Drill, 1/4"- 20 Tap

Sleeve Nut and Bolt



Drill 9/32" thru from Closer Side
3/8" Drill other Side

Check building and fire codes to see if your application requires the use of sleeve nuts and bolts.

COMPONENT PARTS

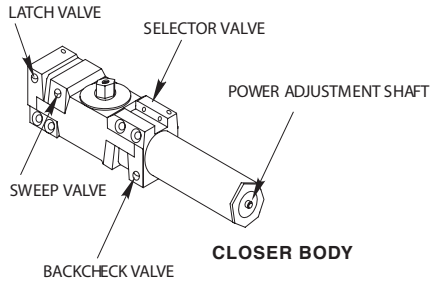

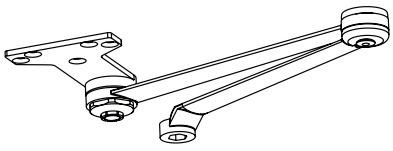

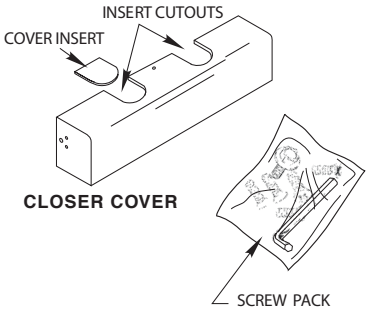

1. MARK AND DRILL HOLES (RIGHT HAND SHOWN)

Locate the arm and degree of opening for this installation. Use the charts below to mark/drill/tap the 1/4-20 holes for the frame soffit and/or rabbet. Use the charts on the following page to mark/drill/tap 1/4-20 holes in the door.

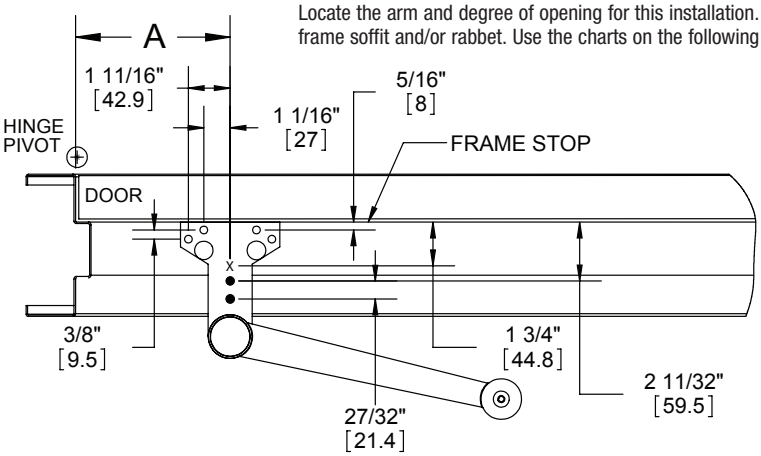

X PREP THIS HOLE IN THE FRAME SOFFIT OR RABBET IF USING THE 5106 OR 5108 ARM.

● PREP THESE (2) HOLES IN THE FRAME SOFFIT OR RABBET IF USING THE 5105 OR 5960 ARM.

5125 EXTRA HEAVY DUTY STOP ARM

Dim. "A"	Door Opening w/ Stop	Door Opening w/o Stop
10-1/2"	90°	100°
9-1/4"	100°	100 - 120°
8-3/8"	110°	120 - 150°

5106 EXTRA HEAVY DUTY ARM & 5108 EXTRA HEAVY DUTY HOLD OPEN ARM

Dim. "A"	Door Opening
9-3/4"	up to 110°
6-1/4"	up to 180°

5961 EXTRA HEAVY DUTY HOLD OPEN STOP ARM:

Dim. "A"	Door Opening w/ Stop	Door Opening w/o Stop
10-7/16"	90°	100°
9-1/4"	100°	100 - 120°
8-3/8"	110°	120 - 150°

1. MARK AND DRILL HOLES (CONTINUED)

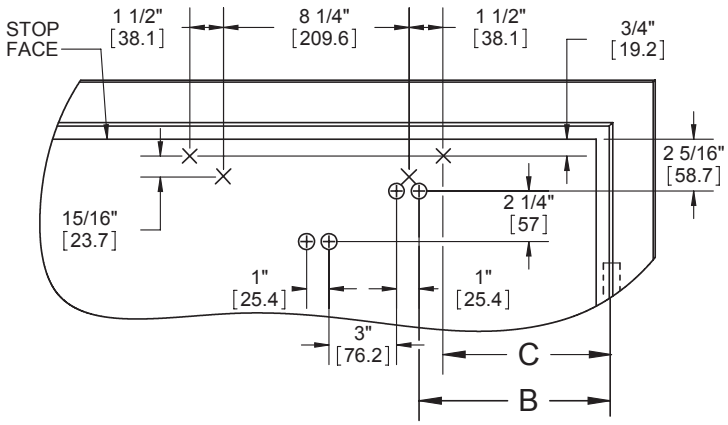

X Prepare these 4 holes for 5110 drop plate only

⊕ Prepare these 4 holes for standard installation of closer to door without drop plate.

Note: Drop plate works with a minimum top rail of 2 1/2".

5125 Extra Heavy Duty Stop Arm &
5961 Extra Heavy Duty Hold Open Stop Arm:

Dim. "B"	**Dim. "C"	Door Opening with Stop	Door Opening w/o Stop
8-3/4"	7-11/16"	90°	100°
7-5/8"	6-9/16"	100°	100 - 120°
6-5/8"	5-9/16"	110°	120 - 150°

5106 Extra Heavy Duty Arm &
5108 Extra Heavy Duty Hold Open Arm:

Dim. "B"	Dim. "C"	Door Opening
8"	6-15/16"	up to 110°
4-1/2"	3-7/16"	up to 180°

**Needed only if using 5110 drop plate

*This table was made using 4 1/2" wide hinges. Use of larger hinges or swing clear hinges will yield different results.

2. ARM & CLOSER BODY INSTALLATION

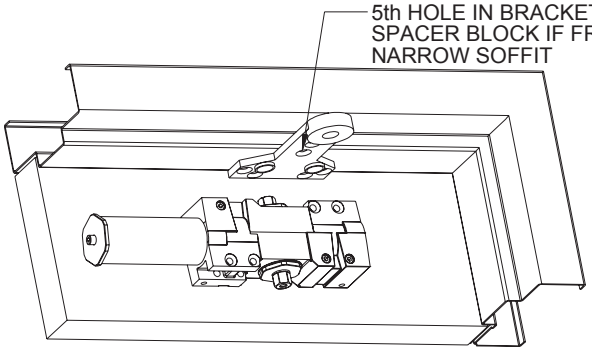

Before mounting closers, make sure selector valve (found on back of closer) is screwed in.

- Screw body to the door using (4) 1/4-20 x 3" screws. The tube end of the closer must face the lock stile of door.
- Screw arm bracket to the frame soffit using (5) 1/4-20 x 1 1/2" screws. Do not tighten screws all the way to make mounting the arm to the closer easier.

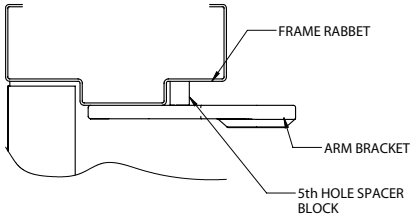

The fifth hole spacer shown above can be used when a narrow soffit prevents normal mounting. Drill/tap a 1/4-20 hole in the frame rabbet. Place the spacer between the bracket and frame and tighten using a 1/4-20 x 2" screw.

CLOSER BODY INSTALLATION (OPT DROP PLATE)

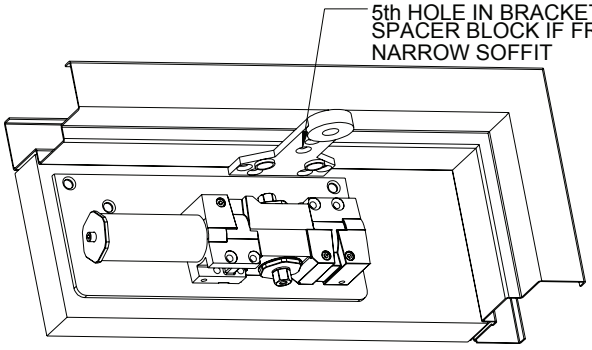

- If using a drop plate, screw the drop plate to the door using 1/4-20 screws. Screw closer to the drop plate using 7/16" long machine screws.

3. MOUNT ARM TO CLOSER

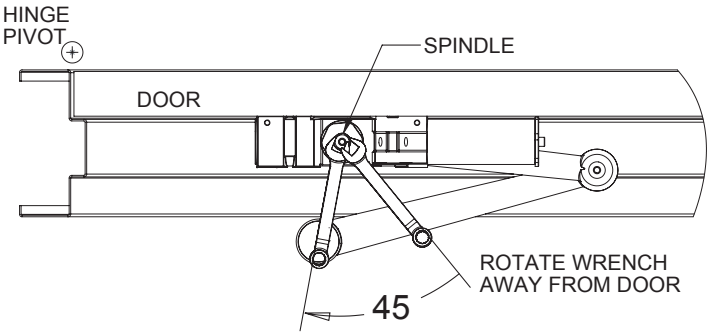

- Use an adjustable wrench to rotate the bottom pinion shaft about 45 degrees in the direction away from the door.

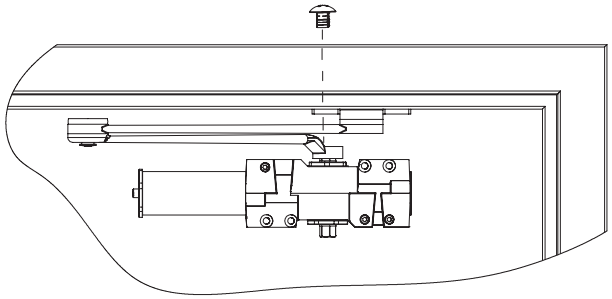

- Place arm on top pinion while holding pinion in position.
- Release hold on pinion shaft and attach arm to closer using pinion screw. Tighten bracket to frame if it was left loose during arm installation.

5125 EXTRA HEAVY DUTY STOP ARM

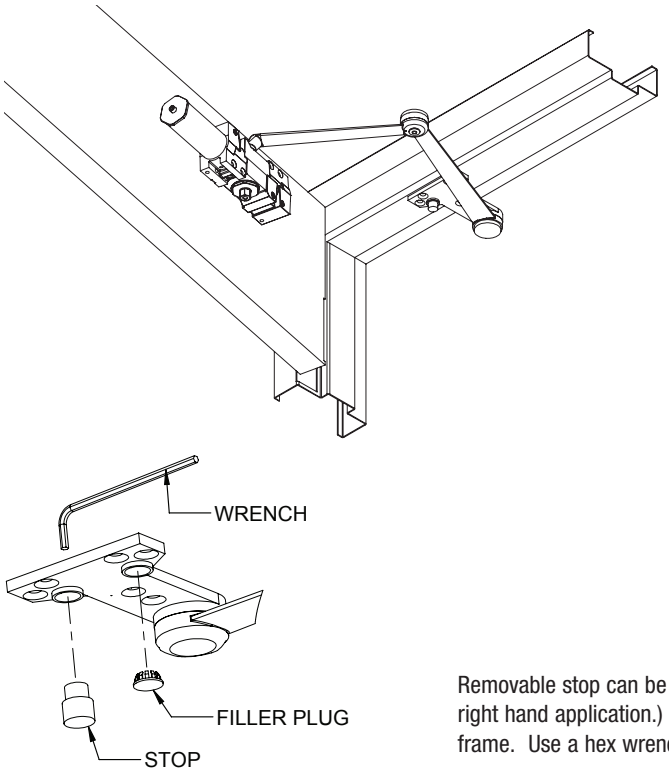

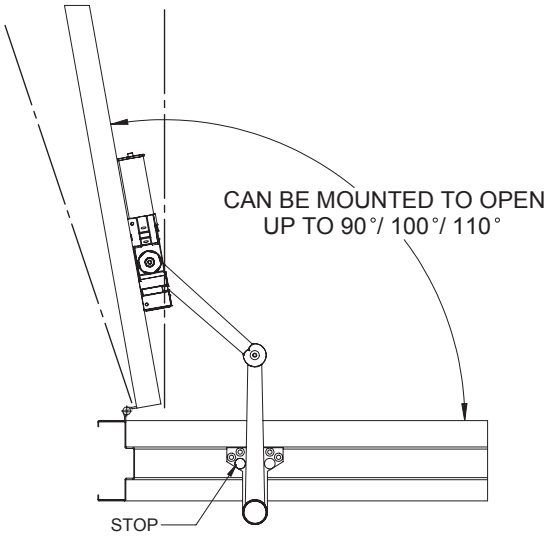

BOTTOM VIEW

Removable stop can be used for right hand or left hand application (currently shown in right hand application.) Stop can only be removed when arm is not attached to the frame. Use a hex wrench to unscrew stop and move it. See picture to the left.

5106 EXTRA HEAVY DUTY ARM

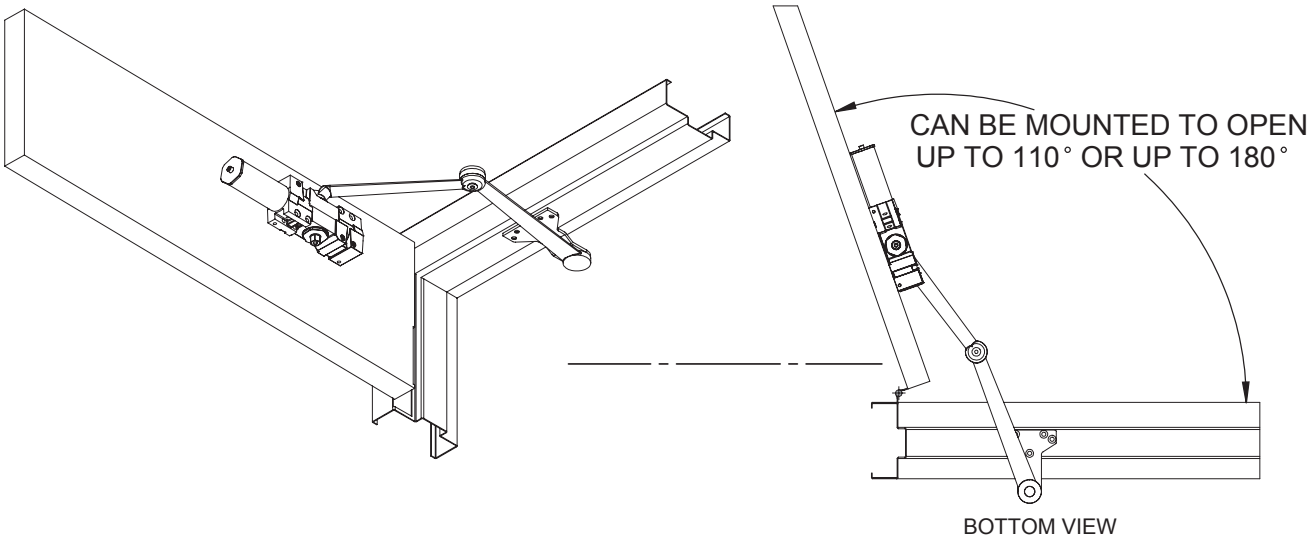

5108 EXTRA HEAVY DUTY HOLD OPEN ARM

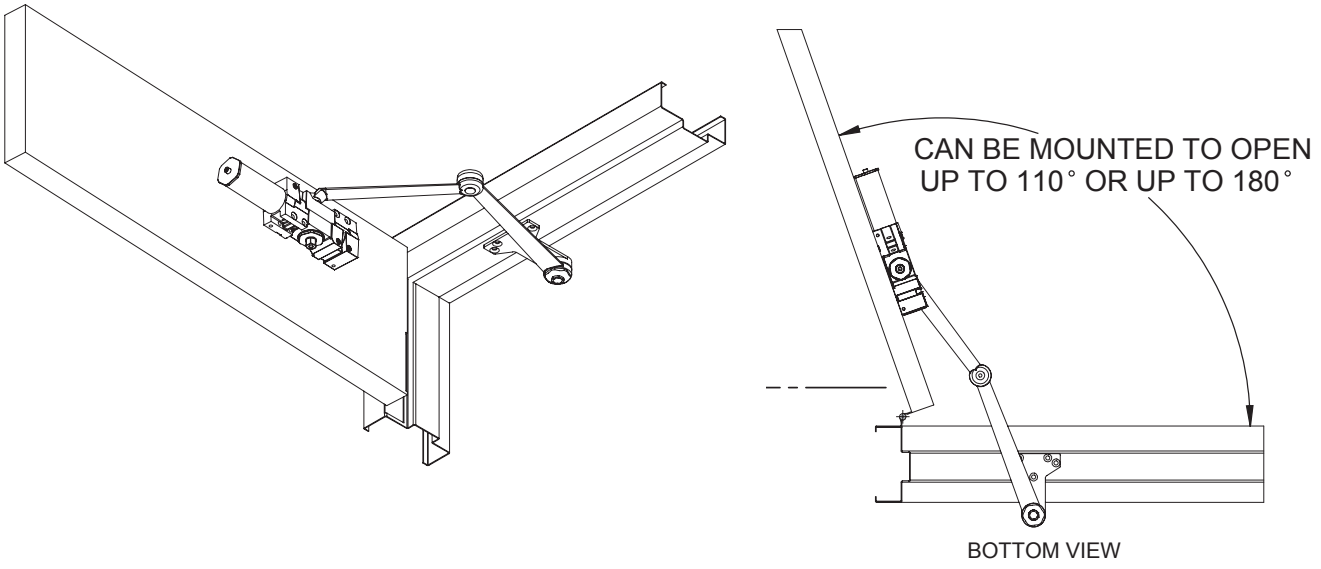

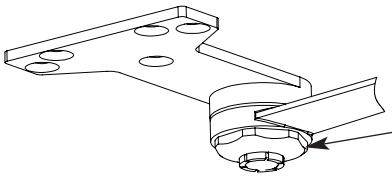

To adjust hold open setting, open the door to about 5 degrees less then the desired position. Use wrench to securely tighten nut on the hold open arm. (Currently shown in right-handed application.)

5961 EXTRA HEAVY DUTY HOLD OPEN STOP ARM

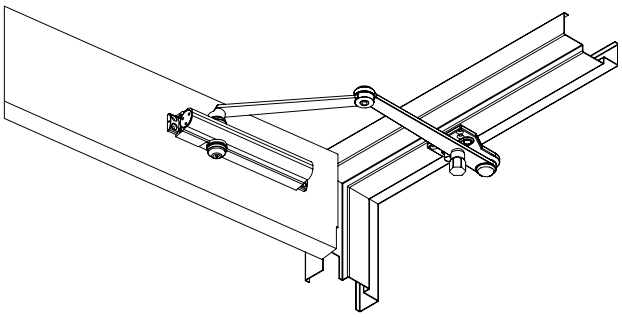

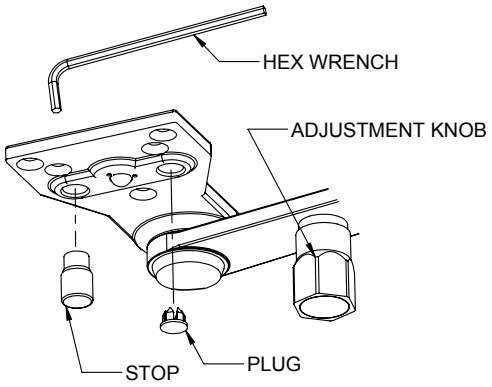

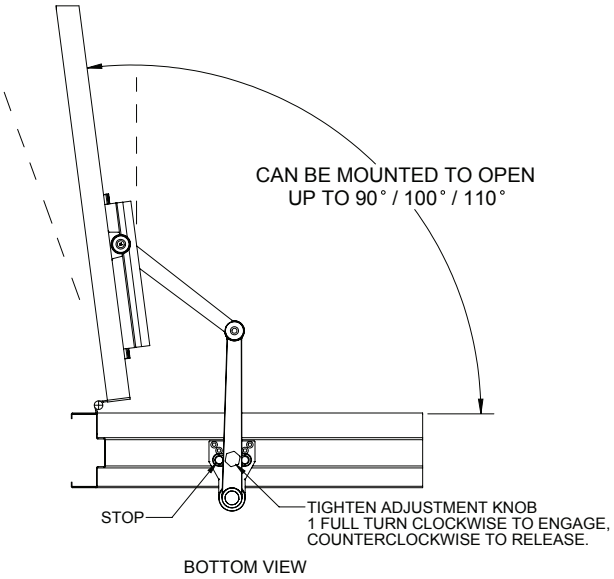

Removable stop can be used for right hand or left hand application (currently shown in right hand application). Stop can only be removed when arm is not attached to the frame. Use a 6mm wrench to unscrew stop and move it. See picture to the left. To engage hold open feature, open door to the stop and rotate adjustment knob clockwise to engage, counterclockwise to release.

4. ADJUSTMENTS

See Adjustments on Page 6 for setting Spring Power, Sweep Speed, Latch Speed, and Backcheck.

NOTE: *Do not fully unscrew valves or hydraulic fluid will leak and closer will no longer be functional.*

5. INSTALL COVER

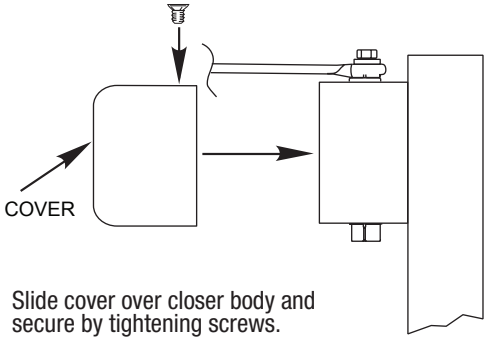

Slide cover over closer body and secure by tightening screws.

ADJUSTMENTS (USE 5/32" HEX WRENCH FOR THESE ADJUSTMENTS)

SWEEP SPEED

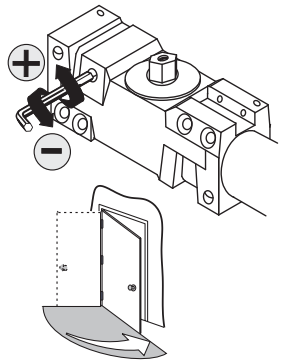

Note: Adjust closing time speed between 3 and 7 seconds from 90° to 0°. Greater closing times may be required for elderly or handicapped.

LATCH SPEED

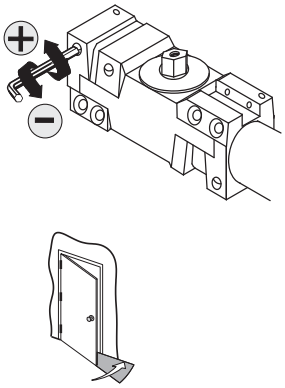

Adjust latch speed so door completely closes and latches.

BACKCHECK **OR** **OPTIONAL DELAY ACTION**

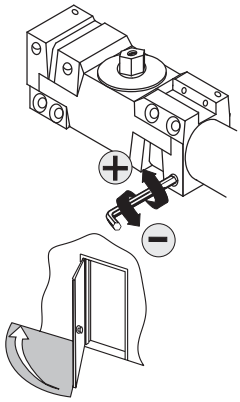

Adjust backcheck accordingly to prevent excessive opening speed.

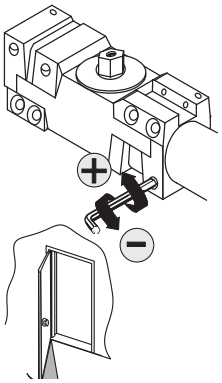

Adjust delay action accordingly to obtain desired delay time.

SPRING POWER ADJUST (SIZING IN ACCORDANCE TO BHMA/ANSI 156.4)

TABLE OF SIZES

Closer is shipped set to size 3. To change the closer size, use a hex wrench to rotate the spring power adjust. Follow the chart to make the correct number of 360° turns to set the closer size appropriately for the door application.

The number of turns is an approximation and does not account for environmental or door hardware affects.

cw = clockwise
ccw = counterclockwise

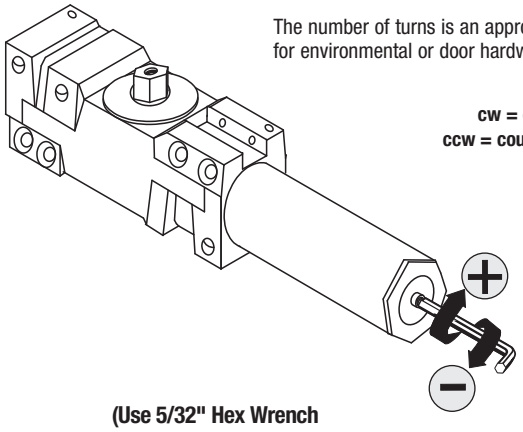

(Use 5/32" Hex Wrench for this adjustment)

Exterior (and Vestibule) Door Width

	Minimum Door Width (24")				
	24" (610mm)	30" (762mm)	36" (914mm)	42" (1067mm)	48" (1219mm)
Regular Arm & Top Jamb	Size 3 (0)	Size 4 (4cw)	Size 5 (8cw)	Size 6 (12cw)	
Parallel Arm	Size 3 (4cw)	Size 4 (8cw)	Size 5 (12cw)		

Interior Door Width

	Minimum Door Width (24")						
	24" (610mm)	30" (762mm)	34" (865mm)	38" (965mm)	48" (1219mm)	54" (1372mm)	60" (1524mm)
Regular Arm & Top Jamb	Size 1 (8ccw)	Size 2 (4ccw)	Size 3 (0)	Size 4 (4cw)	Size 5 (8cw)	Size 6 (12cw)	
Parallel Arm	Size 1 (4ccw)	Size 2 (0)	Size 3 (4cw)	Size 4 (8cw)	Size 5 (12cw)		

CAUTION An incorrectly installed or improperly adjusted door closer can cause property damage or personal injury. These installation instructions should be followed to avoid the possibility of misapplication or misadjustment. **CAUTION**