# ED5860 (B) (F) Series Concealed Vertical Rod Exit Devices

## Installation Instructions

**FM 544 1/98 (617416044)**

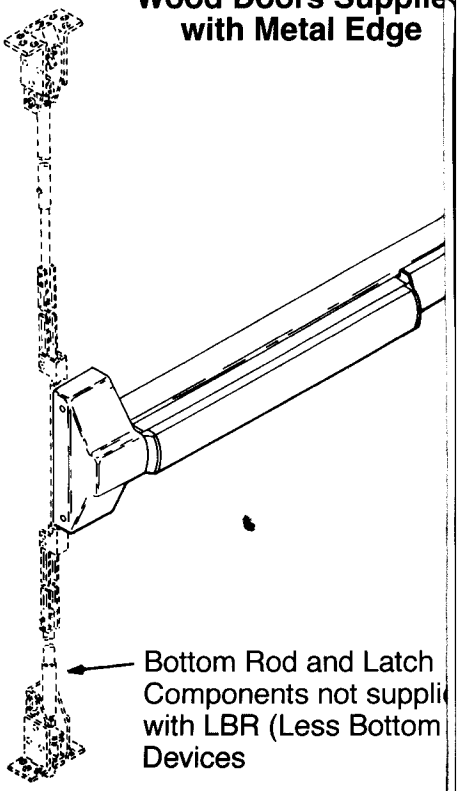


**Outside Tri**

Device is packed read
any compatible Trim

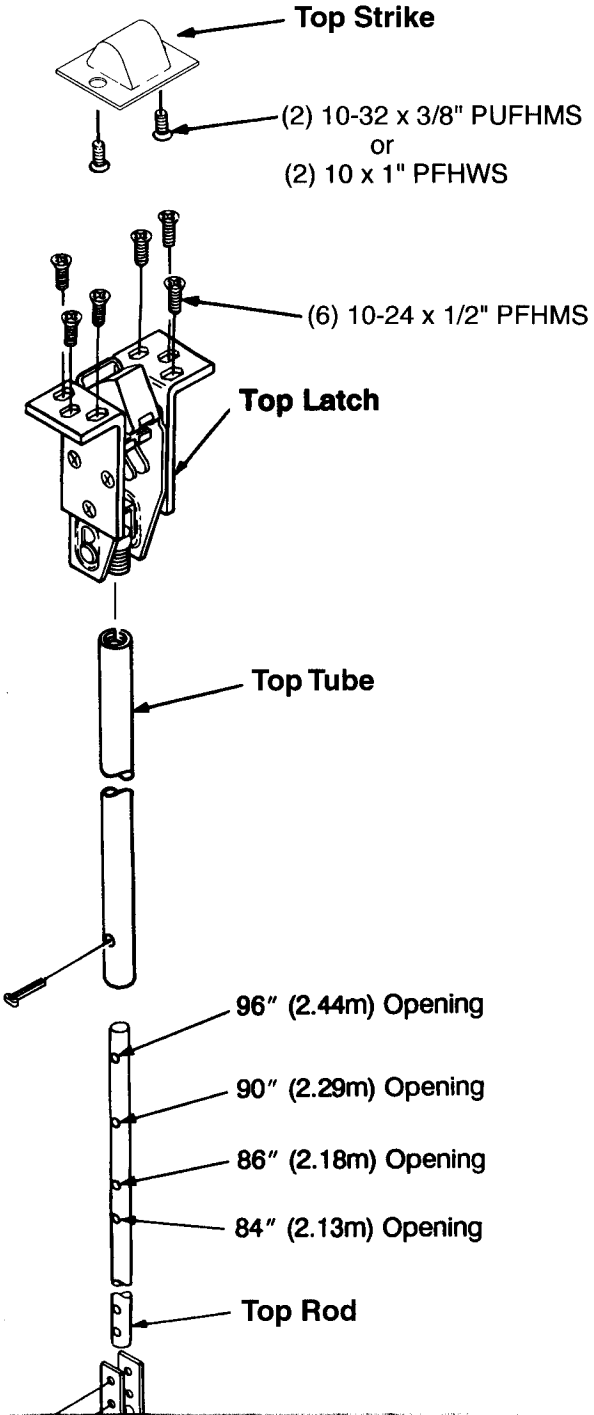


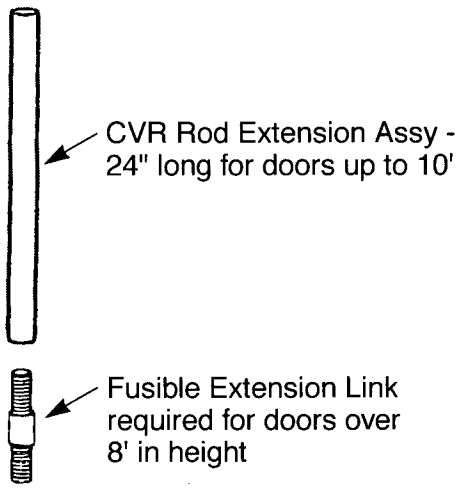

# To Change Hands

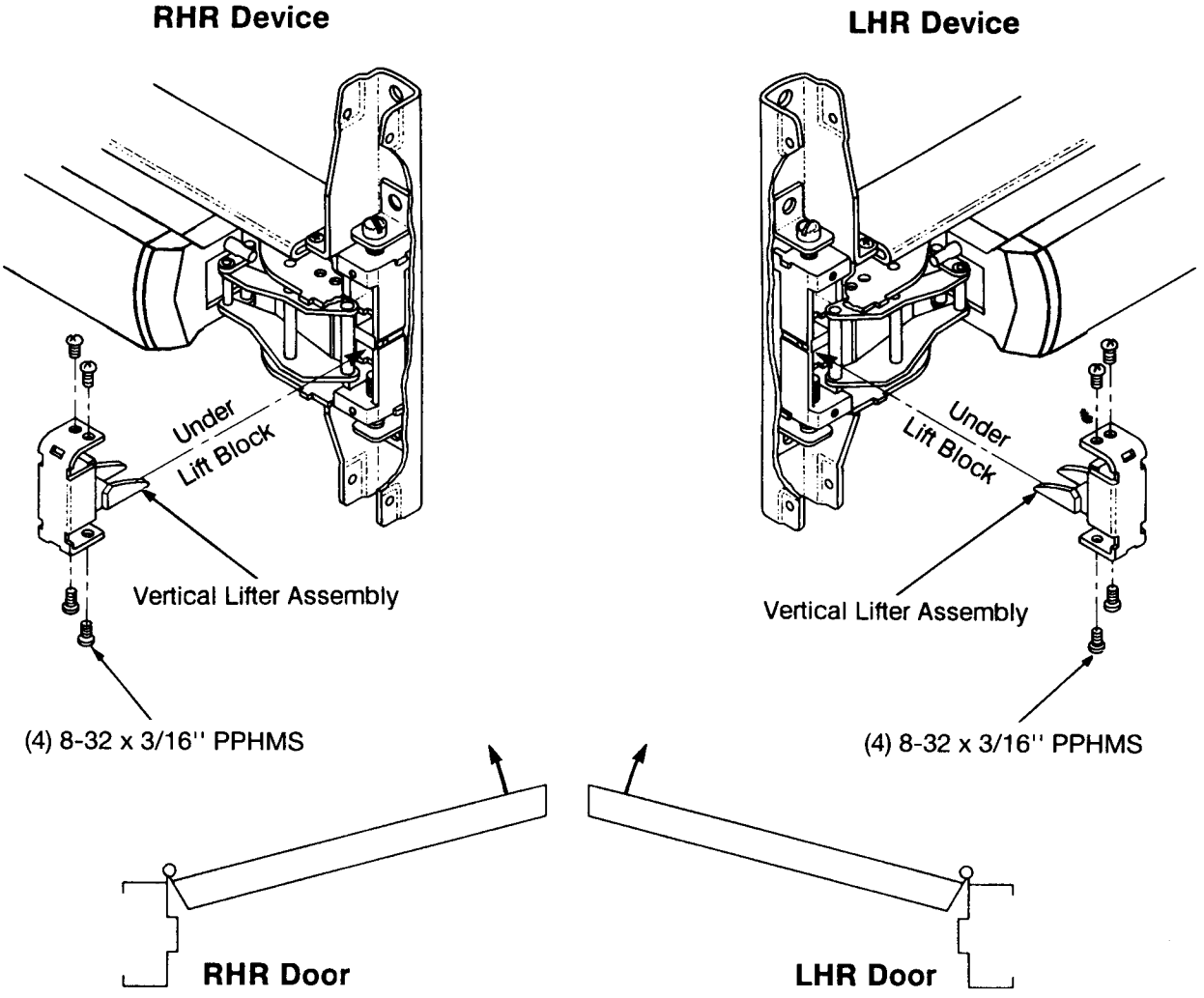


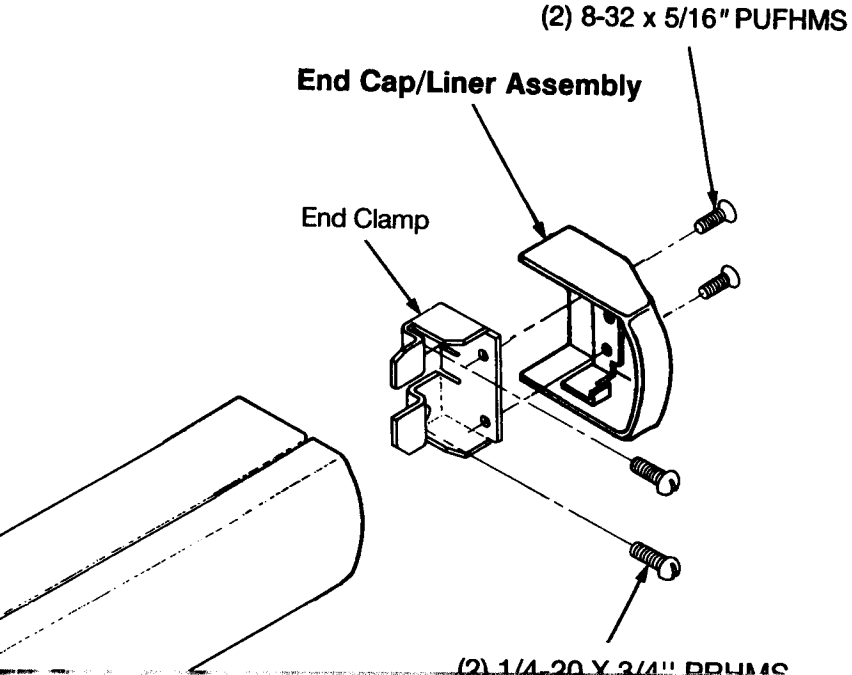


## 1/4-20 Sex Nut Option

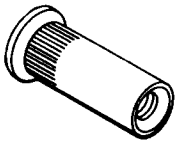

Recommended for unreinforced doors.

| Device | Quantity | Size |
|---|---|---|
| All (No Trim) | 4 | 1/4-20 |
| All (With Trim) | 2 | |

## Rod Extension Options



2" (51mm)
6" (152mm)

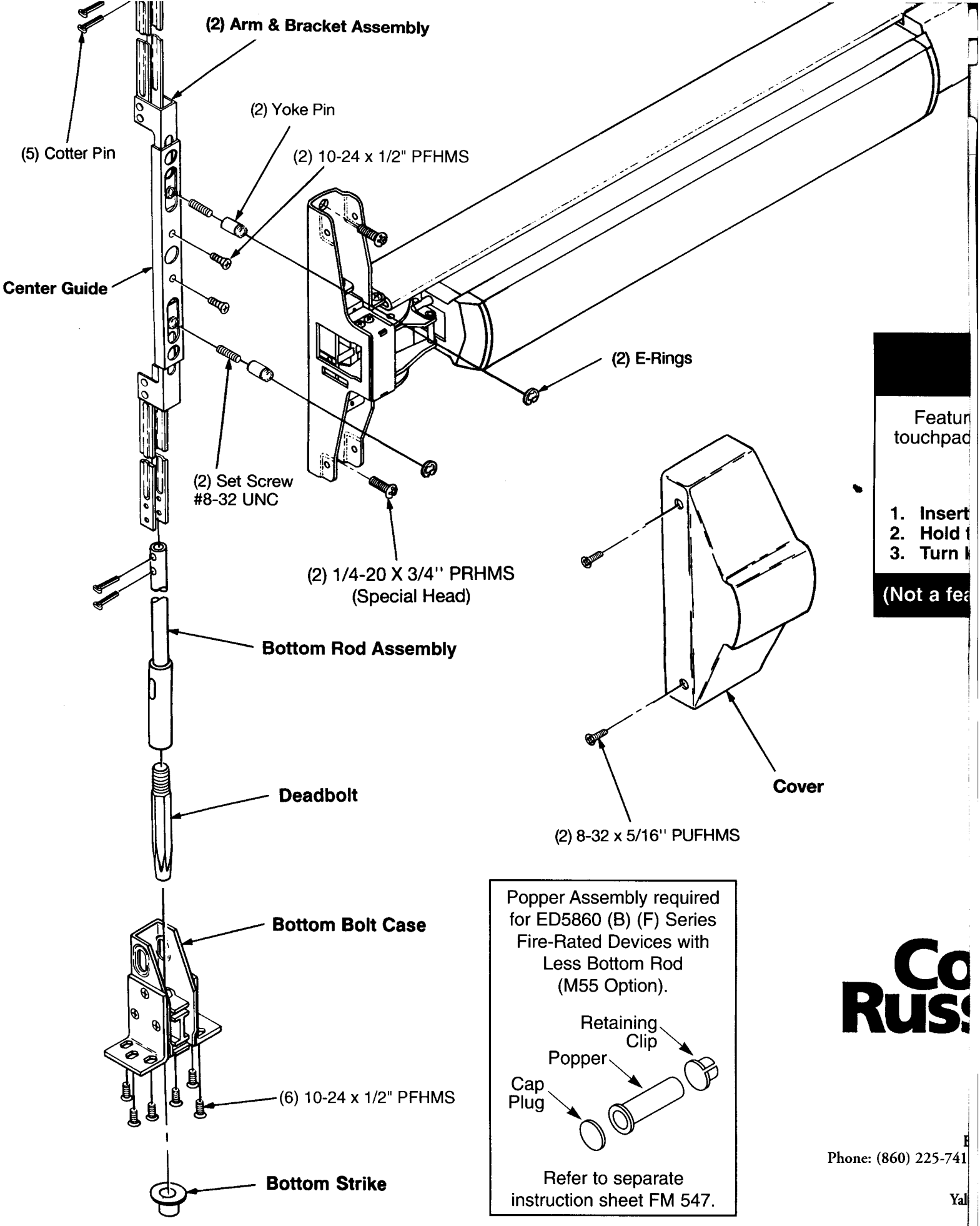


Featur
touchpad

1. Insert
2. Hold
3. Turn

(Not a fea

Popper Assembly required for ED5860 (B) (F) Series Fire-Rated Devices with Less Bottom Rod (M55 Option).




Refer to separate instruction sheet FM 547.

Co
Russ

Phone: (860) 225-741

Ya

Mississauga, On
Phone: (905) 672-622

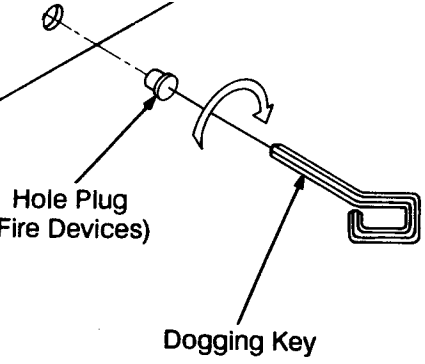


(Special Head)

12" (305mm)
(Specify Device Finish)

# Dogging

to hold bolts retracted and
depressed, for push-pull door
operation.

**To Dog Device**

**ogging key.**
**uchbar depressed.**
**y 1/4 turn clockwise.**

ure of fire labeled devices.)

# Check Before Starting

### Unreinforced Doors or Frames

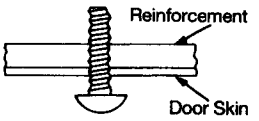


Doors and Frames with walls having a structural thickness (metal skin plus reinforcement) to engage less than (3) full screw threads, are considered unreinforced.

Unreinforced Doors: Use SNB (sex nuts and bolts), or Blind Rivet Nuts.

Unreinforced Frames: Use Blind Rivet Nuts.

Recommended fasteners for unreinforced openings are not necessarily supplied by Corbin Russwin.


Blind Rivet Nut

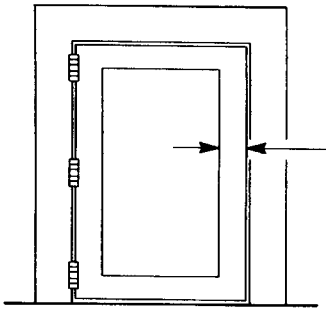

| Minimum Door Stile 4-1/2" (114mm) |
|---|
| **Door and frame must meet structural and dimensional specifications on exit device template(s) for door and frame preparation.** |
| **Device must seat flush on door surface. To clear raised molding, consult the factory.** |

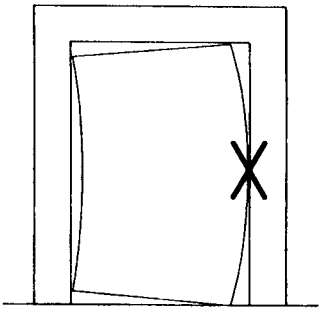
Door Must Not Bind

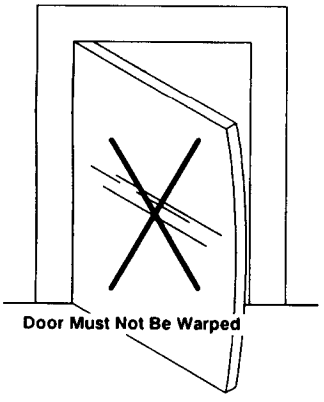
Door Must Not Be Warped

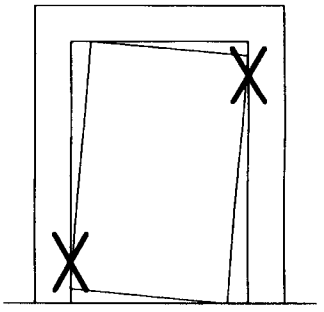
Door Must Not Sag

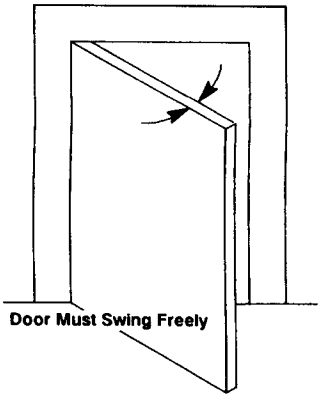
Door Must Swing Freely

# Maintenance

**1.** Periodically remove covers and coat mechanisms with a silicone base lubricant. This is particularly required in corrosive environments for proper product function.

**2.** Check mounting fasteners periodically. Retighten if found loose. Apply screw locking compound (available at automotive part stores) or change part fasteners if screws continue to back up.

**3.** Periodic checks (and adjustments) of rods is required, to compensate for changes in the opening (e.g.: door sagging).

rbin
swin®

In U.S.:
Corbin Russwin, Inc.
225 Episcopal Road
lin, CT 06037 USA
Fax: (860) 828-7266

In Canada:
Corbin Canada LTD.
3160 Orlando Drive
io, Canada L4V1R5
Fax: (905) 672-9022

FM 544 1/98
(617416044)

# Installation Instructions ED5860 (B)

## 1. Mark Door

**Locate and Mark Horizontal and Vertical Reference Centerlines as shown.**

LHR door shown preparation is typical for both door hands.

**Caution:** If device is mounted higher or lower than shown, rod length must change. Lenghten or cut top and bottom rods as shown on Step 4.

**LBR** - For Less Bottom Rod Devices, omit bottom latch and strike installation steps and see separate instructions for top latch and strike.

**NOTE:** Less Bottom Rod (LBR) Devices should not be used where security is a primary concern.

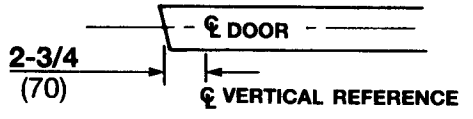


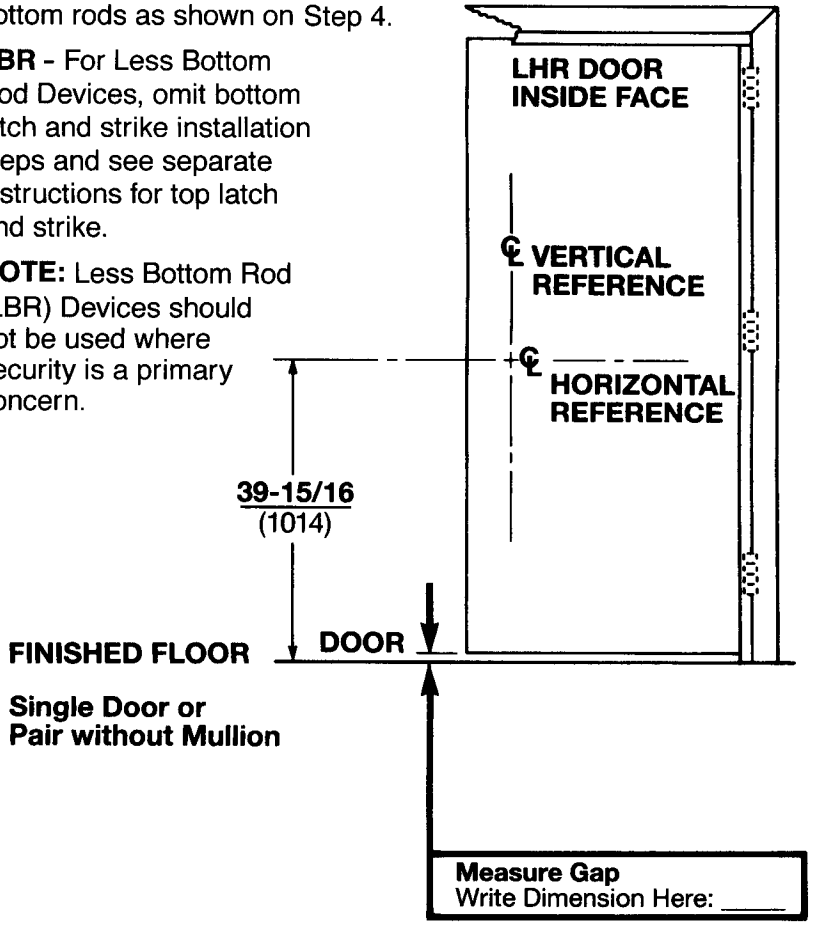


## 2. Prepare Door Frame & Sill

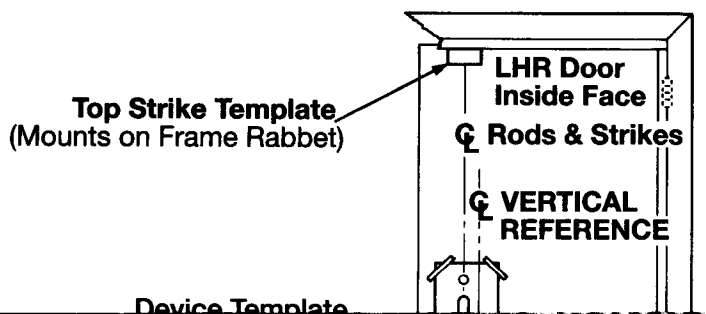


## 4. Rod Assembly

**A.** Remove door from opening. Set flat, device (Do not hang until Step 8.)
**B.** Set length of Top Rod Assembly (see Detail
**C.** Connect Top & Bottom Rods to Arm/Bracke (2 Cotter Pins each), then connect to Center with temporary 8-32x1/4" PPHMS.
**D.** Align Rod Setup Gauge over 2 temporary sc
**E.** Match Gauge, Yoke & Device (door) centerlir Gauge/Yoke holes with holes countersunk o
**F.** Set Top Latch in place.
**G.** Connect Top Latch. Latchbolt must be exter Detail II).
**H.** Set bolt in place.
**I.** Remove Rod Setup Gauge. Check that yoke rods move freely and retract bolts correctly. lever behind bolt to extend top latch and lov to rest position.

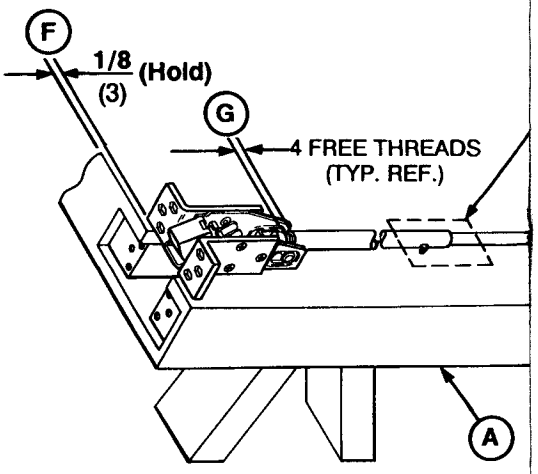


## 5. Install Rods

**A.** Slide Rod Assembly into door.
**B.** Fasten Center Channel with (2) 10-24 x 1/2 PFHMS.
**C.** Attach Top Latch with (6) 10-24 x 1/2" PFH

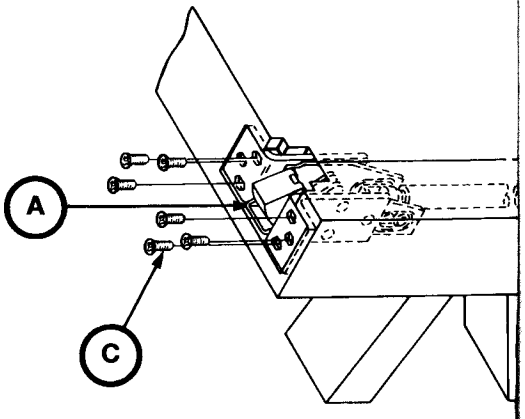


## 6. Install Device

# (F) Series Concealed Vertical Rod Exit Devices

## & Preliminary Adjustment

de up.

Assemblies
Guide

ews.
s. Align
door.

led (See

slides and
epress
r rods

### Detail I - Top Rod Length

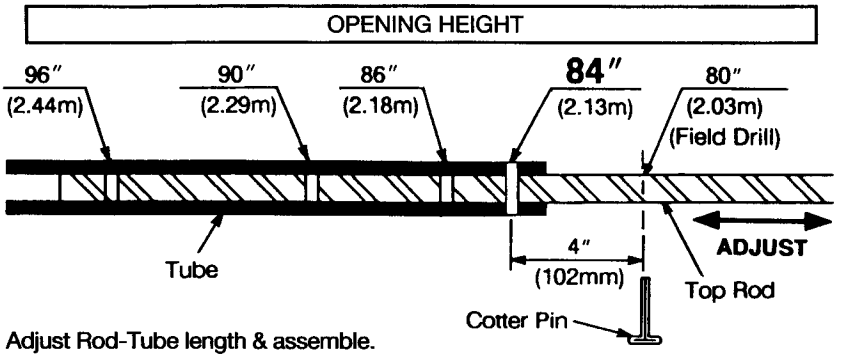


- Adjust Rod-Tube length & assemble.
- For unusual opening heights, locate and drill 1/8" (3mm) hole in Rod.
- Openings over 96" (2.13m) also require Rod Extensions threaded tight to Tube. Apply screw locking compound (available at automotive parts stores) to extension male threads.

### Detail II – Top Latch

**Latchbolt Extended (Correct Assembly)**

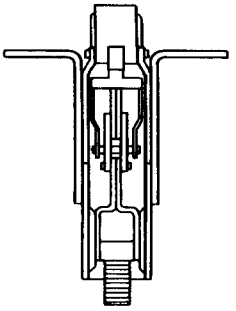

**Latchbolt Retracted (Incorrect Assembly)**

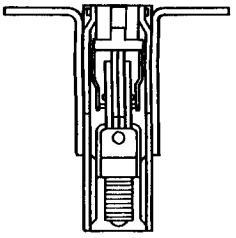

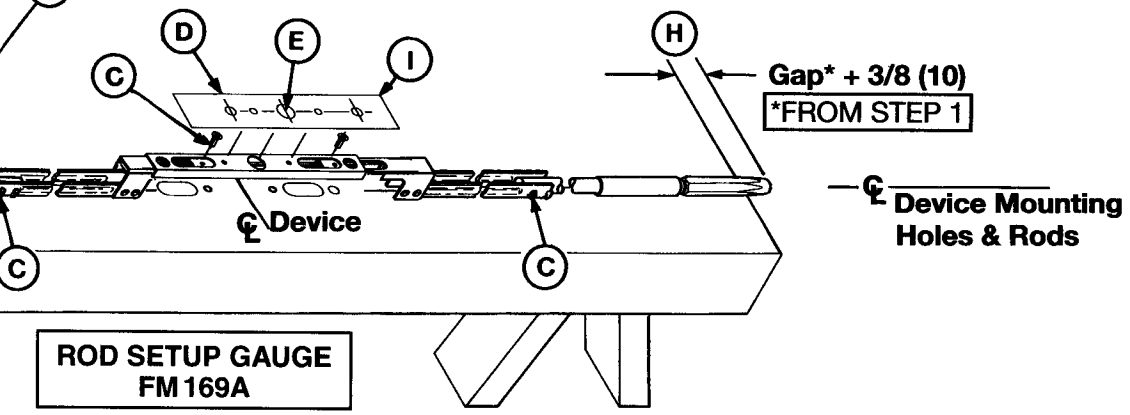


**ROD SETUP GAUGE FM169A**

**D.** Install Bolt Case with (6) 10-24 x 1/2" PFHMS.
**E.** Thread Set Screws into Yoke Pins **(Insert With Hex Socket End Inside Pin).** (See Detail I.)
**F.** Remove Temporary 8-32 Screws from Center Guide and discard. Install (2) Yoke Pins. **Tighten Securely.**

IS.

### Detail I – Pin Assembly

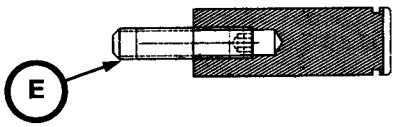





**Check action:** Top rod should move freely until latchbolt stays retracted, and back after bolt release. Bottom rod should move freely up and down, at least 9/16 (14).

## 8. Complete Installation

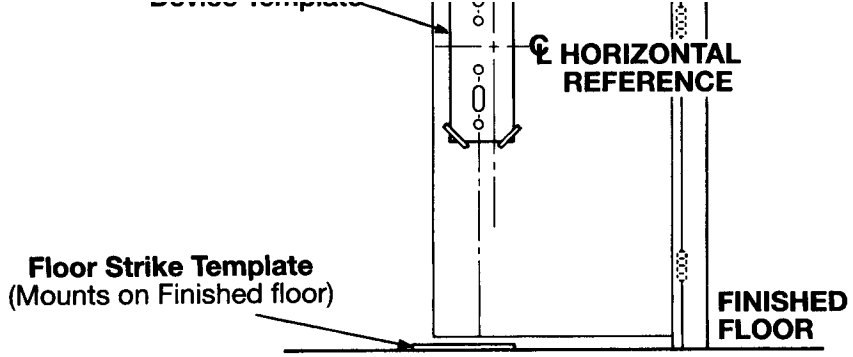


**A.** Locate "Device Template" aligning VERTICAL REFERENCE and HORIZONTAL REFERENCE lines on door and template. Tape template to door face.

**B.** Extend centerline of Rods and Strikes from "Device Template" to door top and bottom, on door face.

**C.** Locate "Top Strike" and "Bottom Strike" templates, aligned with centerline of Rods and Strikes on door. Tape templates in place.

**D.** Locate and tape Trim Template to door (See Instructions Packed with Trim).

**E.** Spot and prepare holes:

**Device and Bolt Case Plates:**

Each (2) 1/4-20 Machine Screws*, or

(2) $\frac{3/8}{(10)}$ Dia. Sex Nuts & Bolts

**(*) Metal reinforced door only.**

**Top Strike:** (2) 10-24 Machine Screws,
**NOTE:** Third Screw MUST ONLY be used to lock Strike in final position (Step 8E).

**Bottom Strike:** $\frac{5/8}{(16)}$ dia. $\frac{3/4}{(19)}$ deep hole.

**Note:** Auxiliary door marker is included to verify correct door preparation. Reinforced doors and frames, with factory made cutouts, are recommended.

# 3. Size Device

**Device must be field cut to size, unless standard opening and device are 36" (0.91m).**

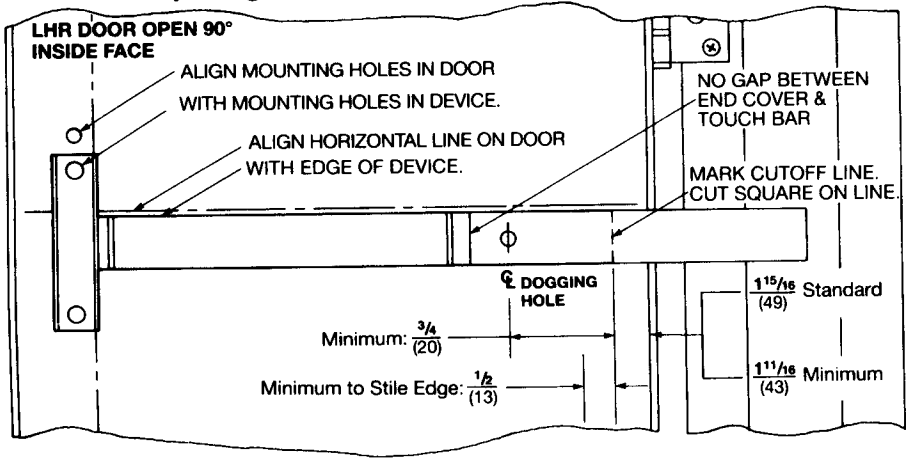


**A.** Mount Trim (Follow Instructions Packed

**B.** Set Rod Adjusting Screws Half Way Thr
Slider, then Connect Rods to Slider (see

**C.** Seat Bar in Place. Fasten Device Head

**D.** Set Bar Level. Locate End Clamp Holes.

**E.** Prepare End Clamp Mounting Holes. Mo
(2 # 1/4-20 PRHMS or $\frac{3/8}{(10)}$ dia. SNB).

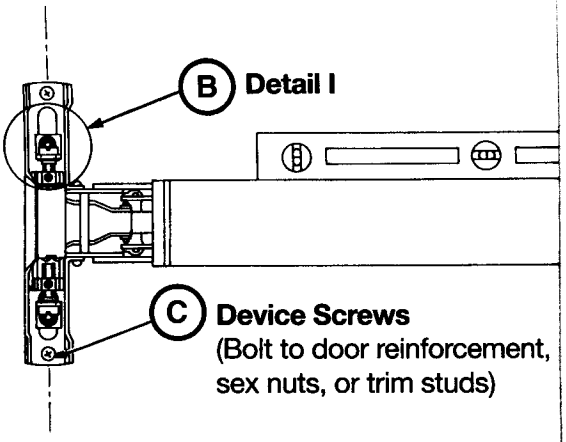


# 7. Install Strikes

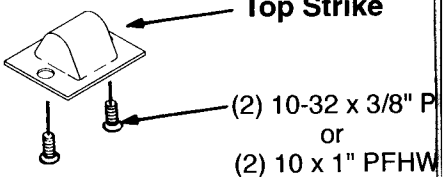


**Detail X**
**(Upper Strike)**

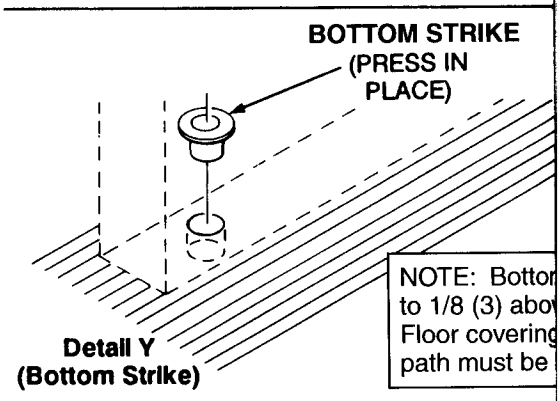


**Detail Y**
**(Bottom Strike)**

Printed in U.S.A.

All dimensions

## 3. Complete Installation

with Trim).
the
Detail I).
2 PRHMS or SNB).

**Detail I**
(Typical 2 Places)

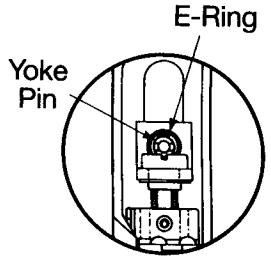


unt End Clamp.

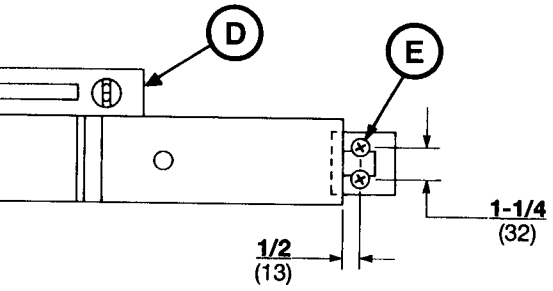


FHMS

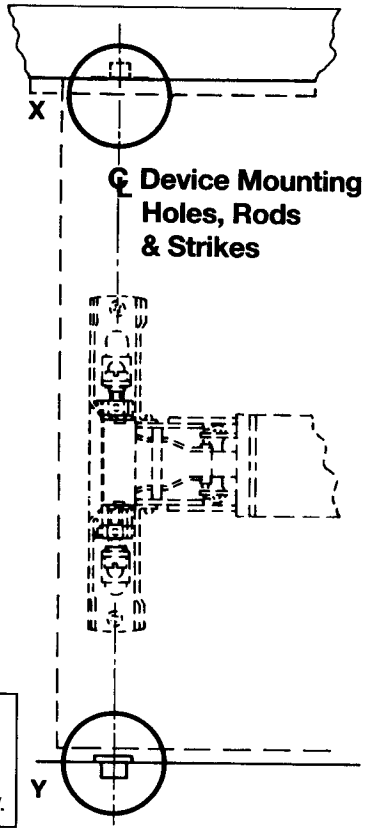


Bolt will retract
Floor Strike.
in the door
ved accordingly.

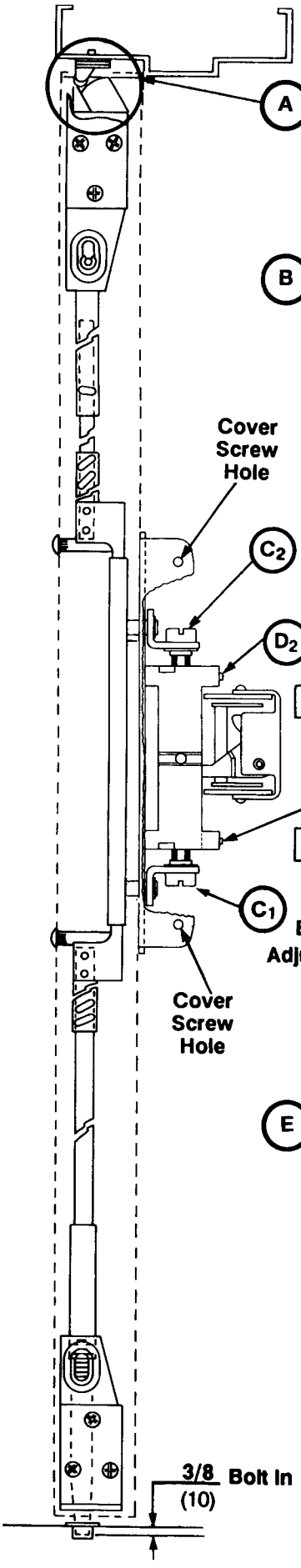


**A** **Rehang the door plumb and true to the opening.**
**Set Strike Roller between Tripping Lever and Bolt.**
DO NOT PRELOAD BOLT.
Shim Strike as needed.

**B** **Test Device action by Touchbar, by Trim, by Dogging.** ADJUST AS NEEDED.
Rods should move free inside door.
Upper Bolt should retract flat.
Bottom Bolt should retract 1/2 (12).
Bolts extend when door shuts and Top Strike hits Tripping Lever.

**$C_2$** **Top Rod Adjusting Screw** — LONGER / TOP ROD / SHORTER

**$D_2$** **Top Rod Locking Screw**
(3/32" Hex Key needed)
LOCK ON ADJUSTING SCREW FLATS

**$D_1$** **Bottom Rod Locking Screw**
(3/32" Hex Key needed)
LOCK ON ADJUSTING SCREW FLATS

**$C_1$** **Bottom Rod Adjusting Screw** — LONGER / BOTTOM ROD / SHORTER

**E** **Install Device Cover and End Cap.**
(2) 8-32 x 5/16" PUFHMS each

re in inches (mm) unless otherwise noted.

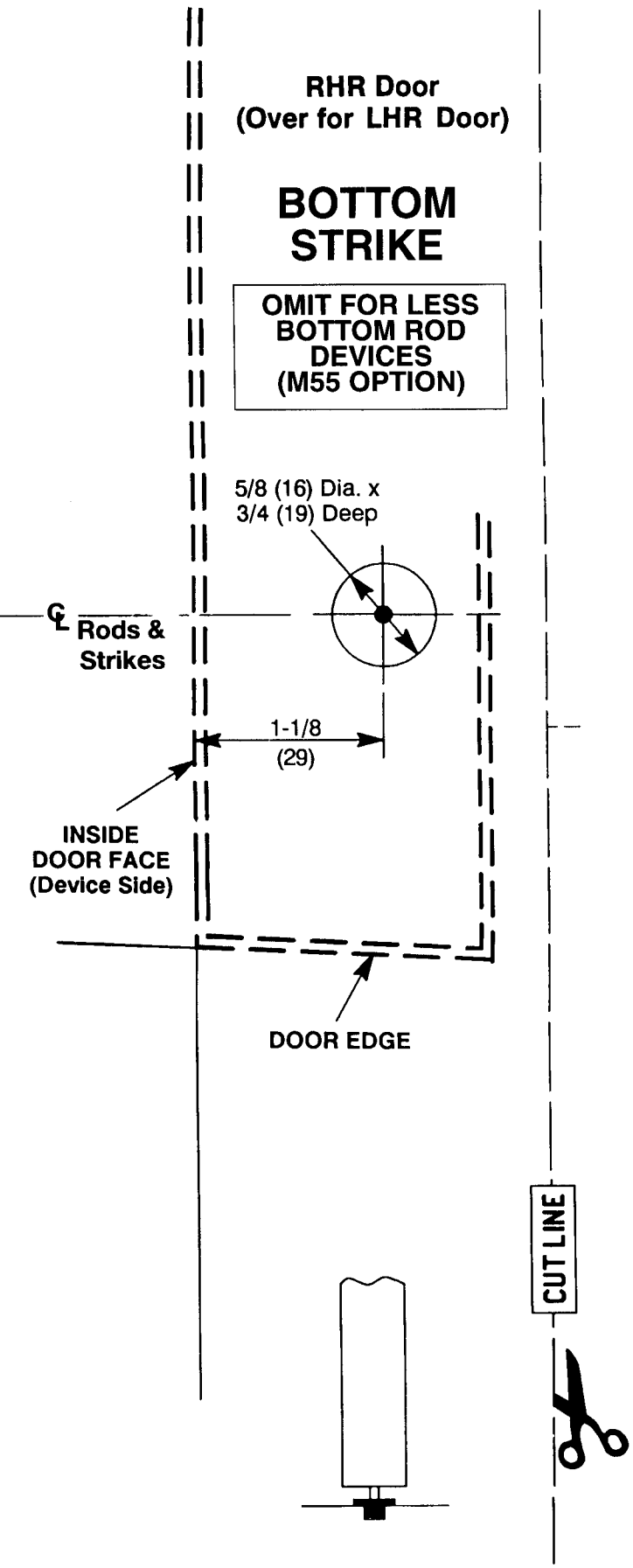





ALIGN WITH DOOR EDGE AND DOOR FACE (DEVICE SIDE)

Corbin Russwin®

In U.S.:
Corbin Russwin, Inc.
225 Episcopal Road
Berlin, CT 06037 USA
Phone: (860) 225-7411 Fax: (860) 828-7266

In Canada:
Yale-Corbin Canada LTD.
3160 Orlando Drive
Mississauga, Ontario, Canada L4V1R5
Phone: (905) 672-6220 Fax: (905) 672-9022

# ED5860 (B) (F) Series
## Concealed Vertical Rod Exit Devices
## Installation Template

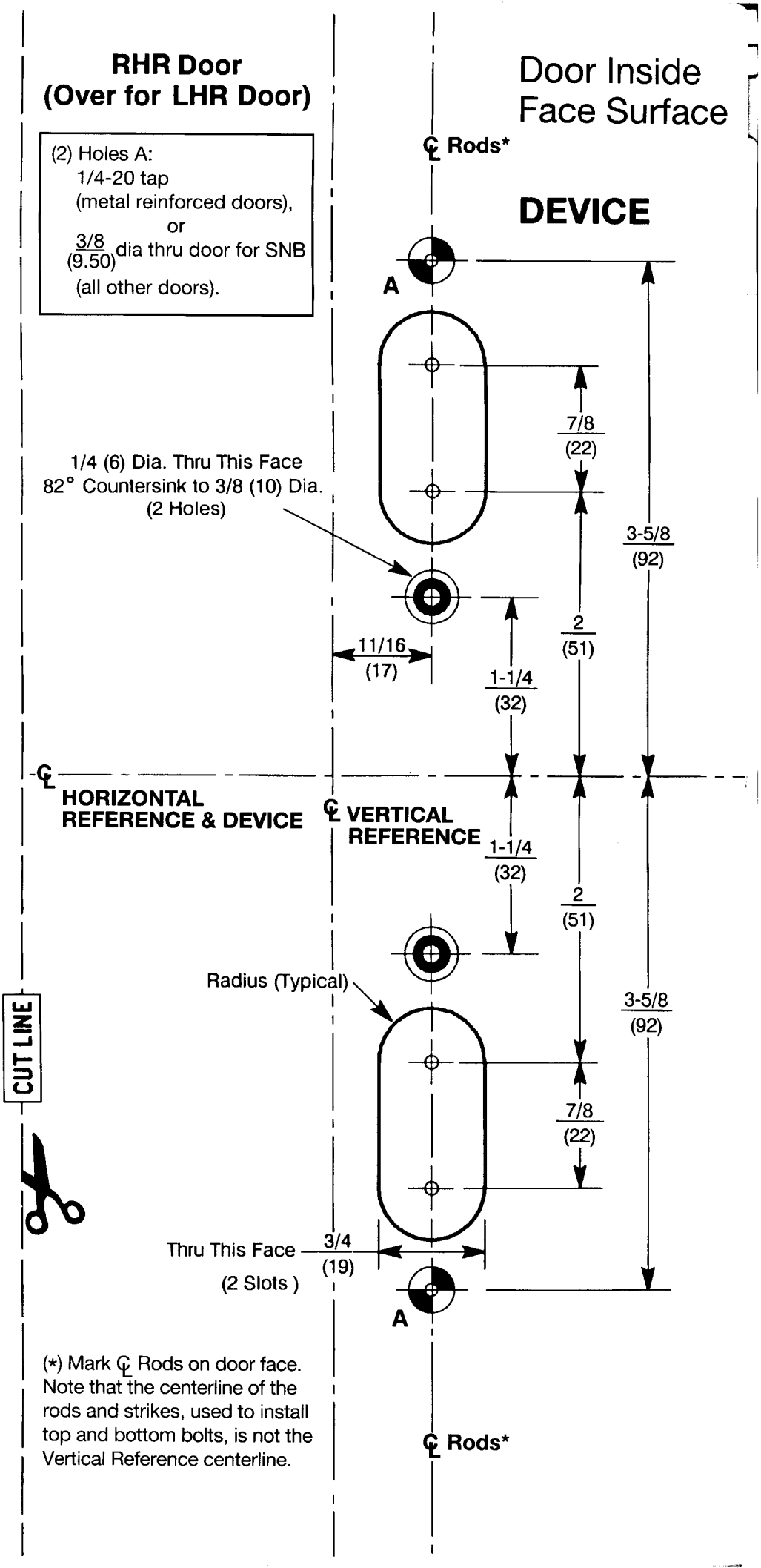
RHR Door
(Over for LHR Door)
(2) Holes A:
1/4-20 tap
(metal reinforced doors),
or
3/8 (9.50) dia thru door for SNB
(all other doors).
Door Inside
Face Surface
℄ Rods*
DEVICE
A
7/8
(22)
1/4 (6) Dia. Thru This Face
82° Countersink to 3/8 (10) Dia.
(2 Holes)
3-5/8
(92)
2
(51)
11/16
(17)
1-1/4
(32)
℄
HORIZONTAL
REFERENCE & DEVICE
℄ VERTICAL
REFERENCE
1-1/4
(32)
2
(51)
Radius (Typical)
CUT LINE
3-5/8
(92)
7/8
(22)
Thru This Face
(2 Slots )
3/4
(19)
A
(*) Mark ℄ Rods on door face.
Note that the centerline of the
rods and strikes, used to install
top and bottom bolts, is not the
Vertical Reference centerline.
℄ Rods*

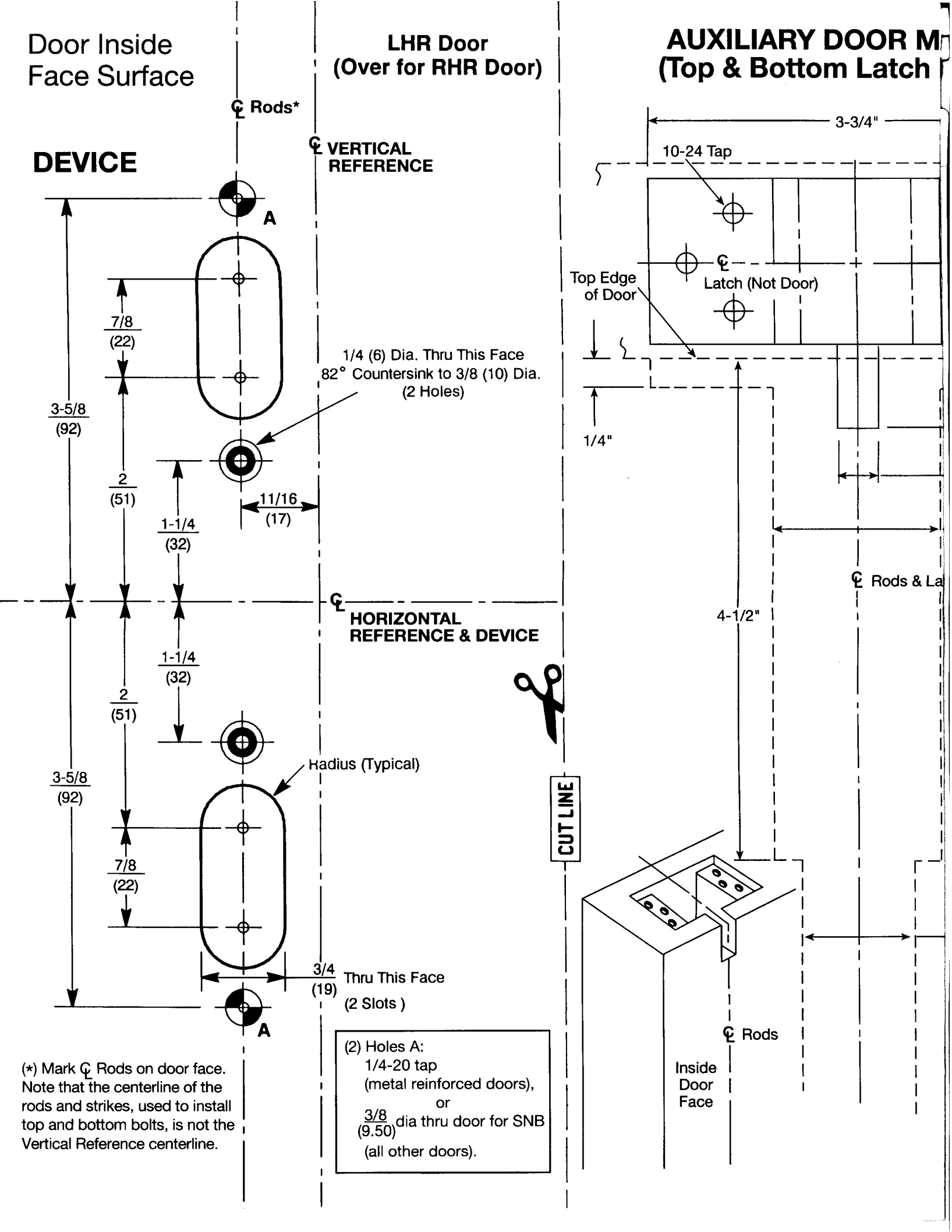
Door Inside Face Surface
LHR Door (Over for RHR Door)
AUXILIARY DOOR M
(Top & Bottom Latch
℄ Rods*
DEVICE
℄ VERTICAL REFERENCE
A
7/8 (22)
3-5/8 (92)
2 (51)
1/4 (6) Dia. Thru This Face
82° Countersink to 3/8 (10) Dia.
(2 Holes)
11/16 (17)
1-1/4 (32)
℄ HORIZONTAL REFERENCE & DEVICE
1-1/4 (32)
2 (51)
3-5/8 (92)
Radius (Typical)
7/8 (22)
3/4 (19) Thru This Face
(2 Slots )
A
CUT LINE
3-3/4"
10-24 Tap
℄ Latch (Not Door)
Top Edge of Door
1/4"
4-1/2"
℄ Rods & La
℄ Rods
Inside Door Face
(*) Mark ℄ Rods on door face. Note that the centerline of the rods and strikes, used to install top and bottom bolts, is not the Vertical Reference centerline.
(2) Holes A:
1/4-20 tap
(metal reinforced doors),
or
3/8 (9.50) dia thru door for SNB
(all other doors).

ARKER
Mounts)

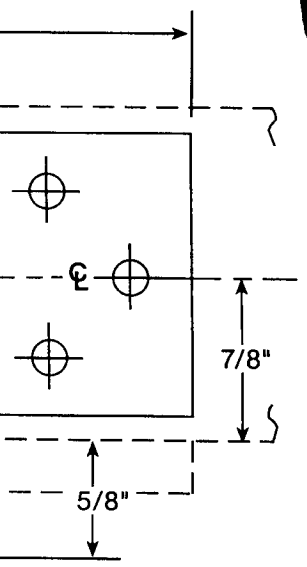


3/8"

1-1/2" Square

hes

**Notes:**

- 1-1/2 (38) square cavity, centered on rods, is needed to be 4-1/2" deep minimum in top and bottom of door, for full length optional.
- Top and bottom latch holes shown for reference. Position latch in place to locate holes.

1" Minimum

CUT LINE

## TOP STRIKE

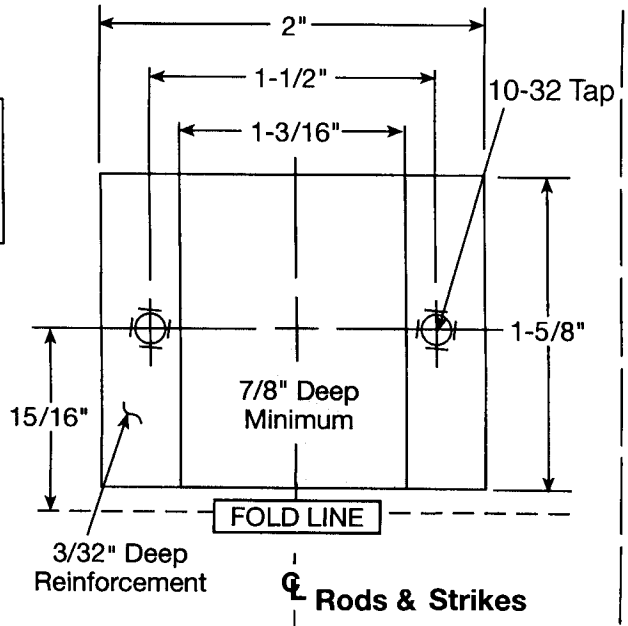


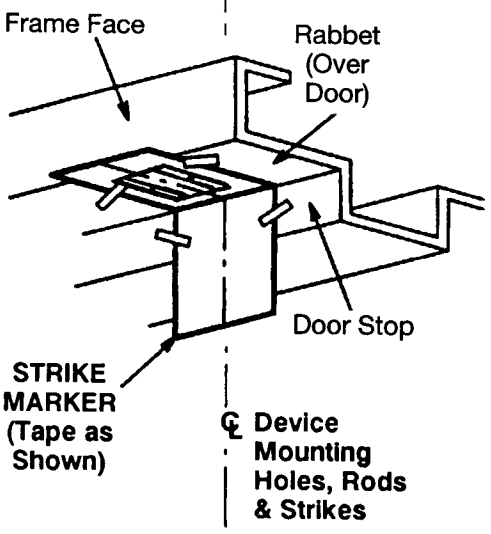


**LHR Door**
**(Over for RHR Door)**

## BOTTOM STRIKE

**OMIT FOR LESS BOTTOM ROD DEVICES (M55 OPTION)**

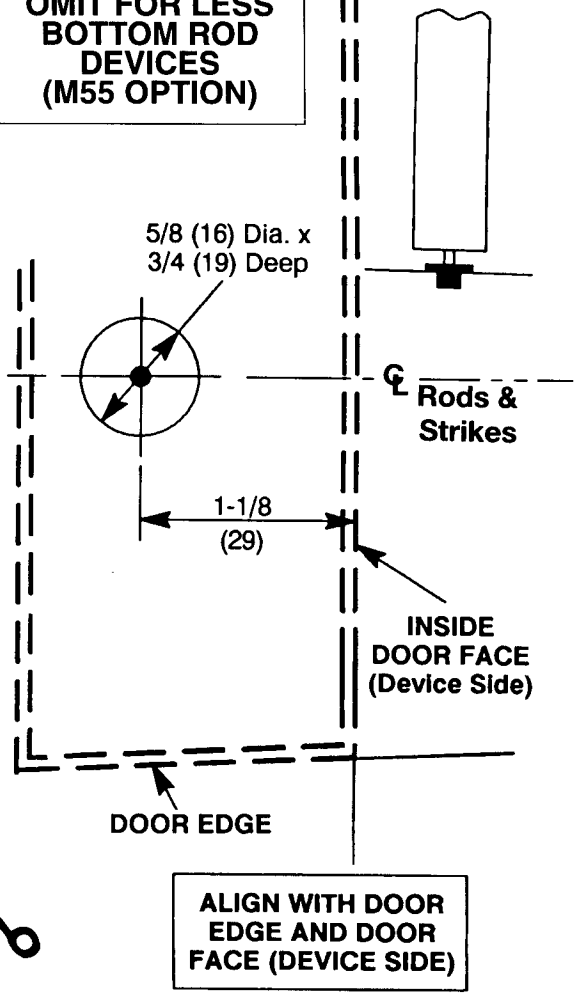


CUT LINE

**Instructions:**

1. Use with Installation Instructions FM 544.
2. For LBR Devices, omit bottom latch and strike in installation steps.
3. Less Bottom Rod (LBR) Devices should not be used where security is a primary concern.
4. Unreinforced frames (total wall thickness less than $\frac{1/8}{(3.2)}$ require) that 10-32 blind rivet nuts (by others) be used to bolt strike.
5. Dimensions given in $\frac{\text{inches}}{(\text{mm})}$.
6. **CAUTION:** Office copiers and facsimile machines may change the size of a drawing and make the template inaccurate to use as a door marker. If this is not the original template packed with the device, use only the dimensions written on the template to locate the holes on the door (do not use the template as a door marker).

# ED5860 (B) (F) Series
## Concealed Vertical Rod Exit Devices
## Installation Template

FM 545 1/98 (617416045)