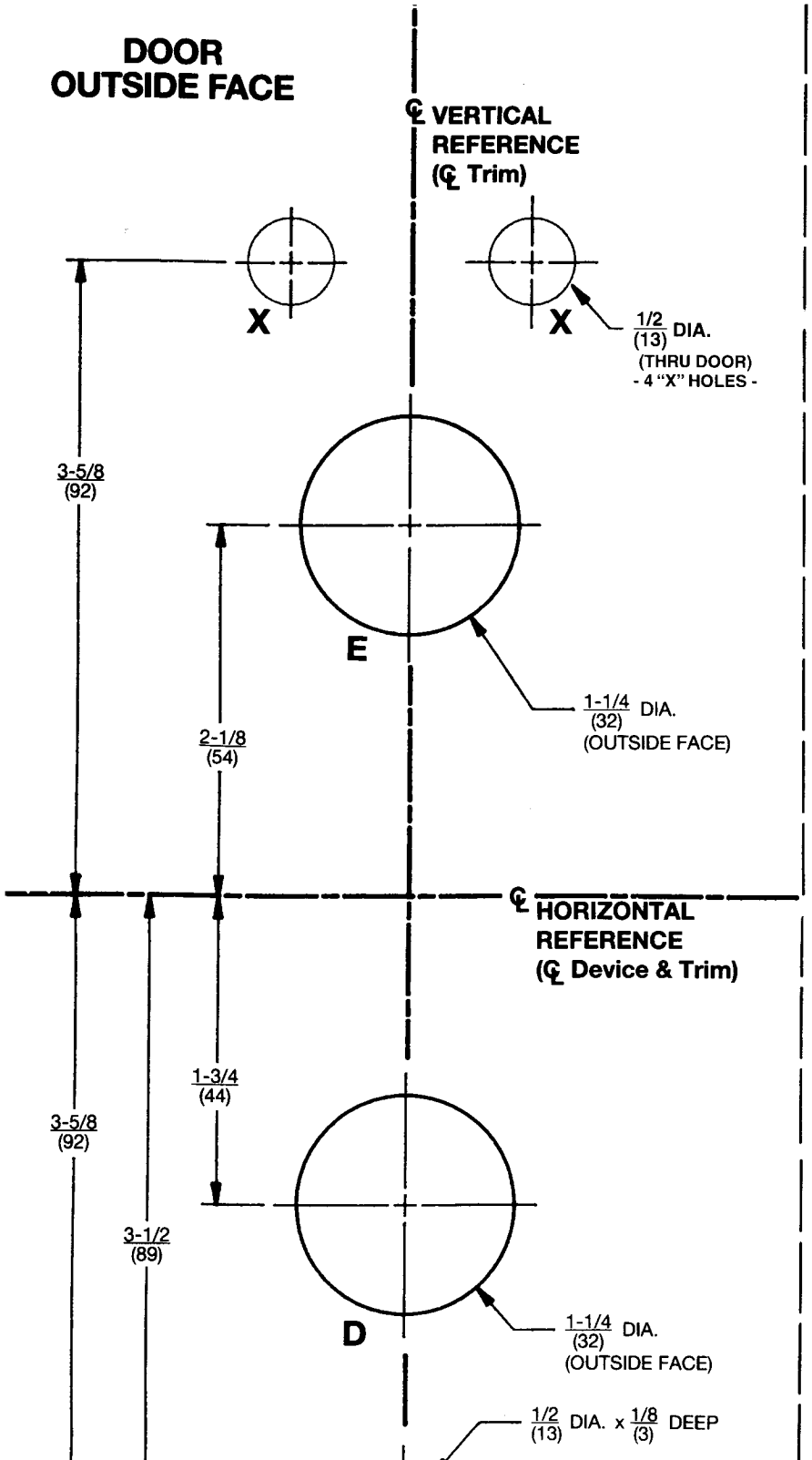

Installation Instructions

1. Select template holes required. Cross out holes not needed for mounting trim.

TRIM	HOLES
F2M57	X & E
*7M55, *7M57, *9M55, *9M57	X, D & E
*7M10, *7M50, *9M10, *9M50	X, & D
F3M57	X, Y & E
T13M57	X, Y, Z & E

* designates letter(s) of grip design.

2. Assemble trim. See other side for components and instructions.
NOTE: Device – Trim match in Function Chart. (over)

3. After marking door inside face for device location (Device Instructions), carry "Vertical Reference Centerline" from inside to outside door face. Follow steps 3a. and 3b. below.

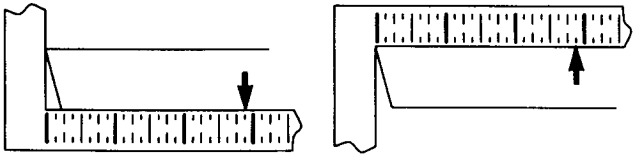

3a. MEASURE INSIDE LINE LOCATION.

3b. CARRY DIMENSION OVER TO OUTSIDE FACE.

4. Carry "Horizontal Reference Centerline" from inside to outside door face.

5. Align trim template and tape to outside door face.

CAUTION: Office copiers and facsimile machines may change the size of a drawing and make the template inaccurate to use as a door marker. It this is not the original template packed with the trim, use only the dimensions written on the template to locate the holes on the door (do not use the template as a door marker).

6. Spot holes and prepare door for trim.

7. Mount trim to door (Fig. 1). Fasten finger tight only with 2 or 3 screws (b) and washers (c), seated on door. Assemble Cylinder Spring Washer and Collar onto Cylinder and thread into lock till seated in collar recess with keyway positioned as shown.
Exception: 9M series Heavy Duty Trims do not require Collars and instead, seat within Escutcheon recess.

8. Continue as shown in device instructions.

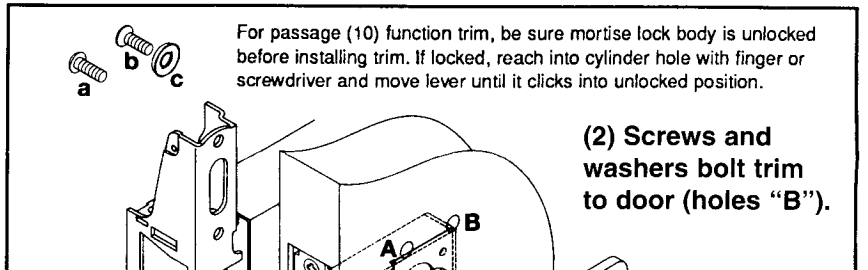

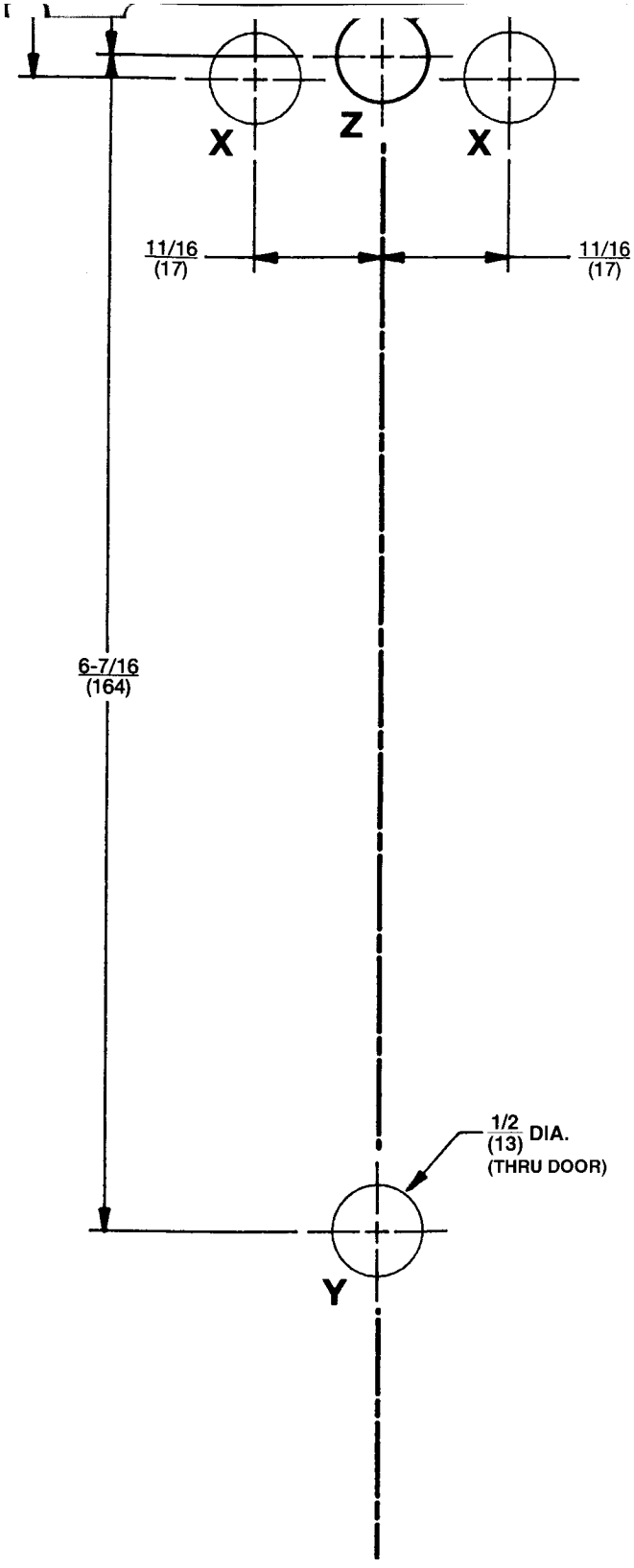

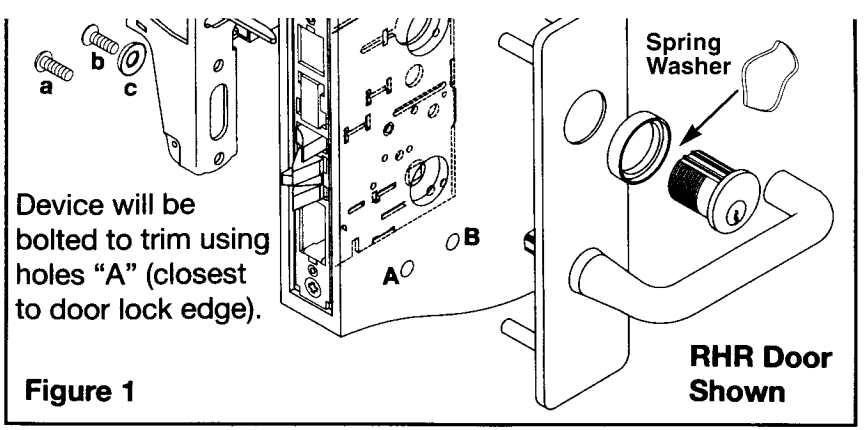

Figure 1

Dimensions given in inches (mm)

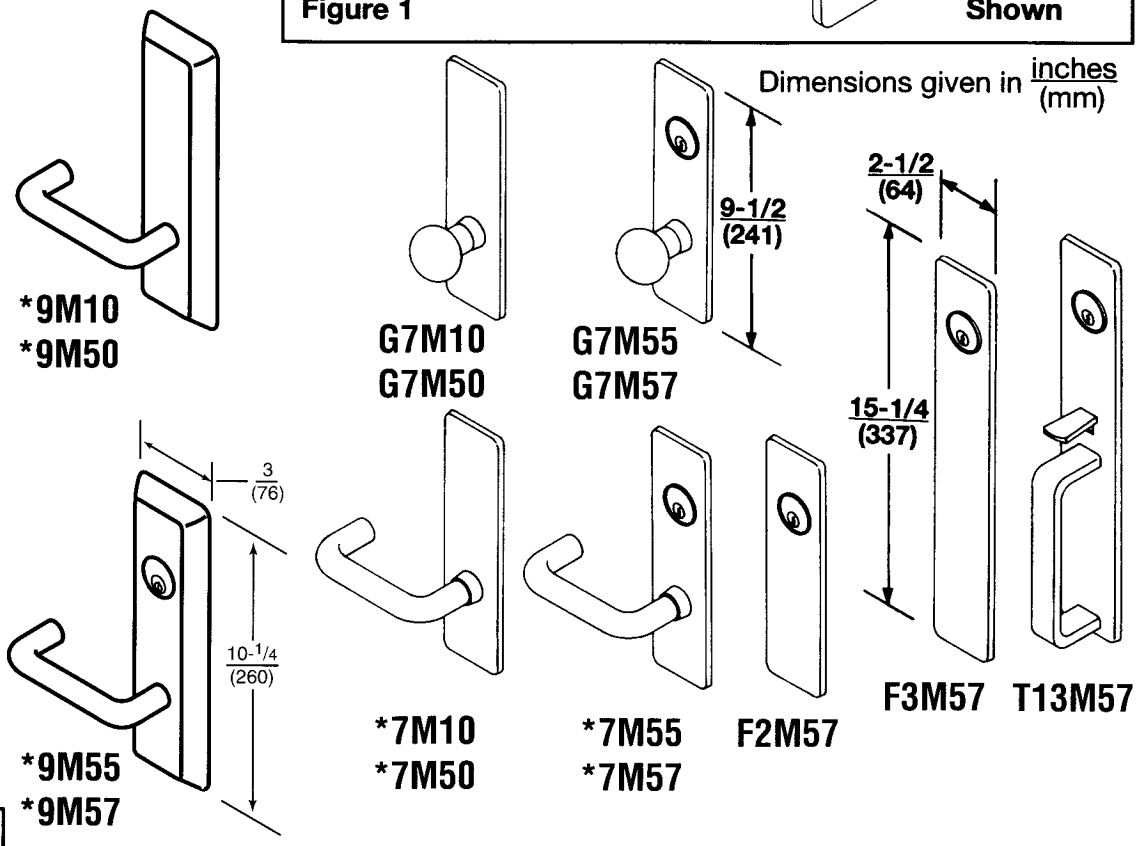

CUT LINE

*7M10, *7M50, *7M55, *7M57, *9M10, *9M50, *9M55, *9M57, F2M57, F3M57, T13M57 Exit Device Trim Installation Template

* designates letter(s) of grip design.

FM 181B 4/97
(617416016)

Trim Assembly Instructions

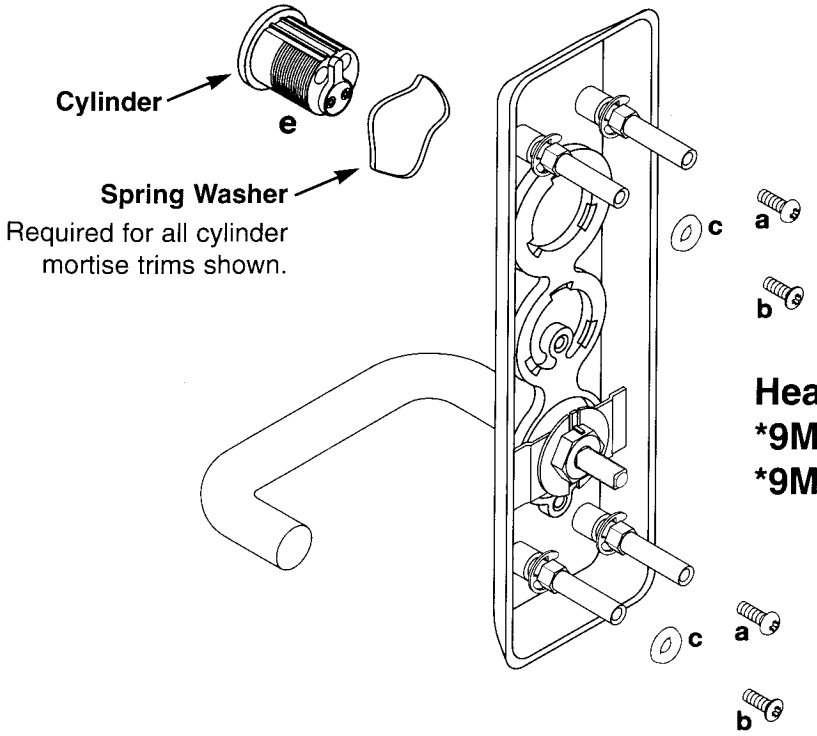

Heavy Duty Series
***9M10, *9M50 (no cylinder)**
***9M55, *9M57 (shown)**

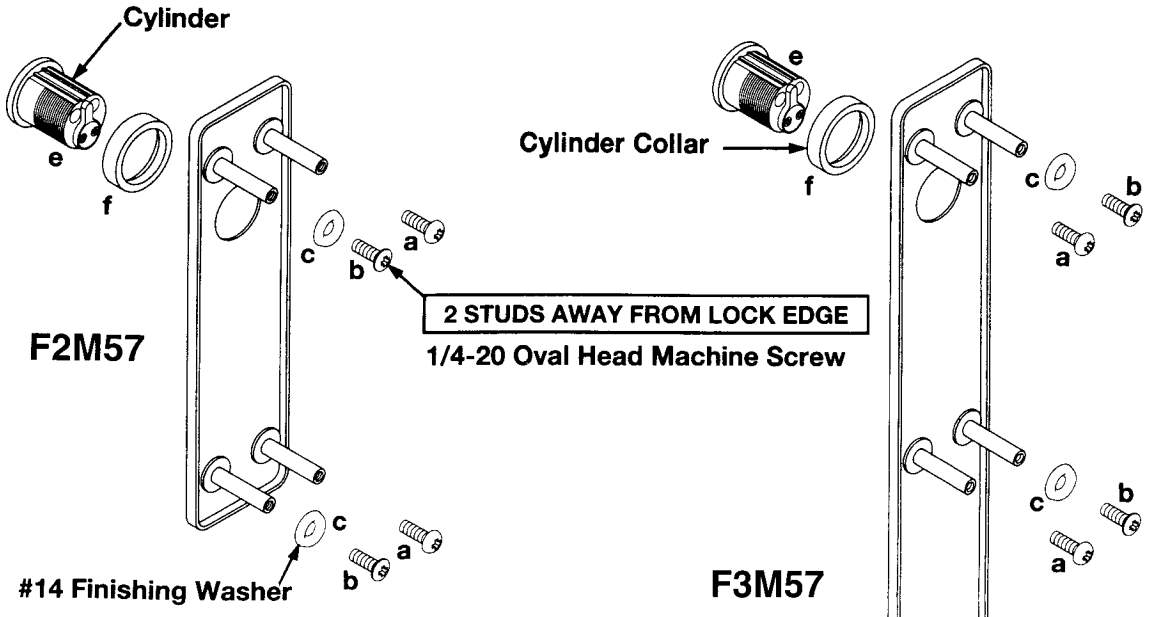

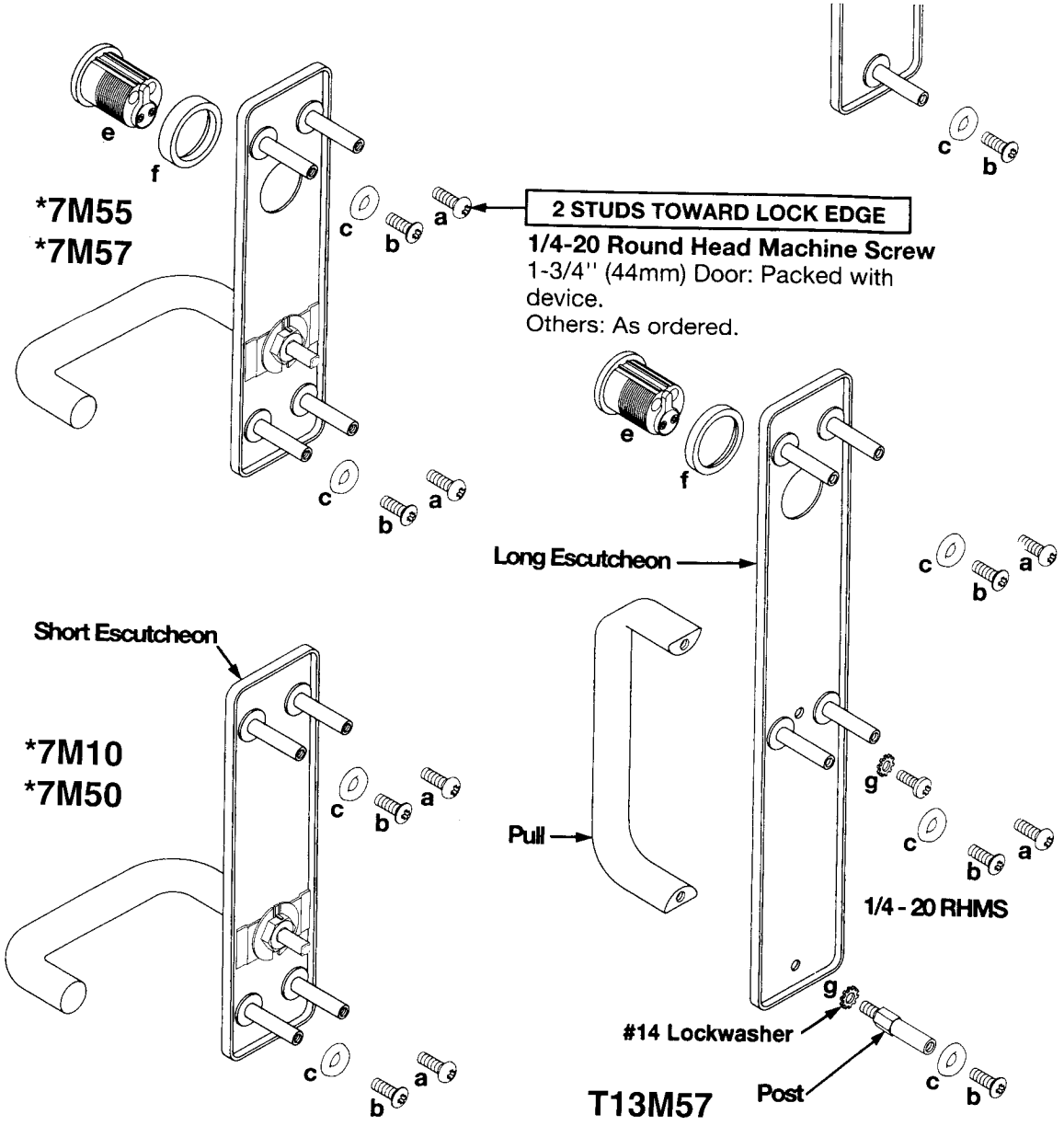

Note: All trims are non-handed.

* designates letter(s) of grip design

In U.S.:
Corbin Russwin, Inc.
225 Episcopal Road
Berlin, CT 06037 USA
Phone: (860) 225-7411 Fax: (860) 828-7266

In Canada:
Yale-Corbin Canada LTD.
3160 Orlando Drive
Mississauga, Ontario, Canada L4V1R5
Phone: (905) 672-6220 Fax: (905) 672-9022

FM 181B 4/97
(617416016)