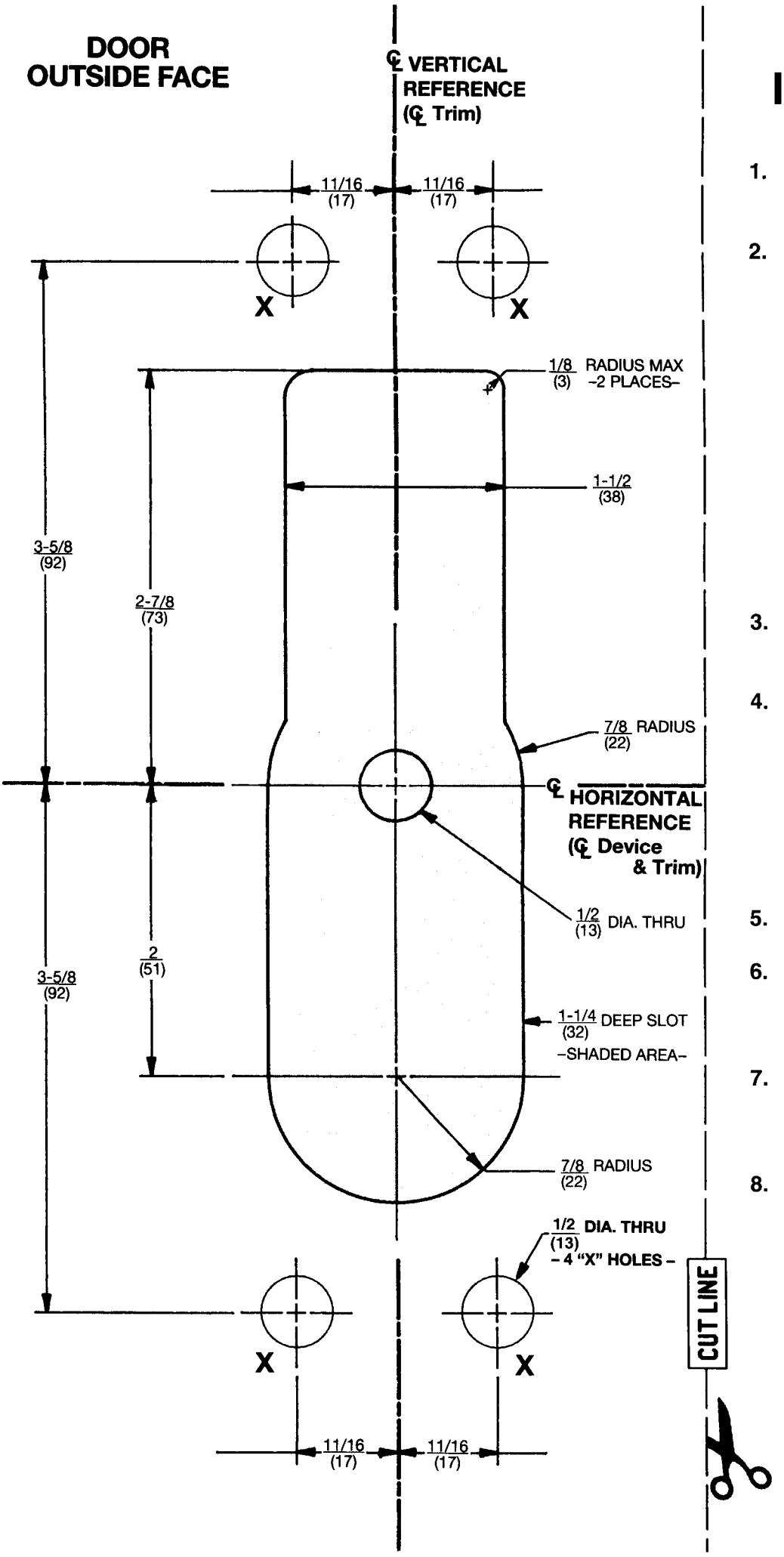

Installation Instructio

1. Assemble trim. See other side for compone and instructions.

2. After marking door inside face for device loc (Device Instructions), carry "Vertical Refere Centerline" from inside door face. Follow ste 2a. and 2b. below.

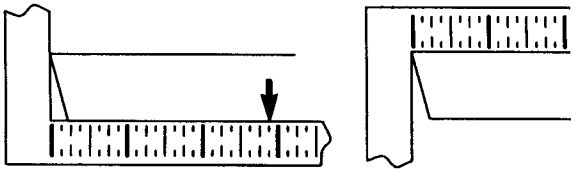

2a. MEASURE INSIDE LINE LOCATION.

2b. CARRY DIMEN TO OUTSIDE F

3. Carry "Horizontal Reference Centerline" fro inside to outside door face.

4. Align trim template and tape to door outside face.
CAUTION: Office copiers and facsimile machines change the size of a drawing and make the templa inaccurate to use as a door marker. If this is not th original template packed with the trim, use only the dimensions written on the template to locate the h on the door (do not use the template as a door ma

5. Spot holes and prepare door for trim.

6. Mount trim to door. Fasten finger tight only 2 screws and washers seating on door, as in Figure 1.

7. With trim unlocked (tailpiece turning when l is depressed), cut trim tailpiece as shown ir Figure 2.

8. Seat device so that trim tailpiece penetrates slot, as shown in Figure 1. Continue as sho device instructions.

Dimensions given in $\frac{\text{inches}}{(\text{mm})}$.

Figure 1

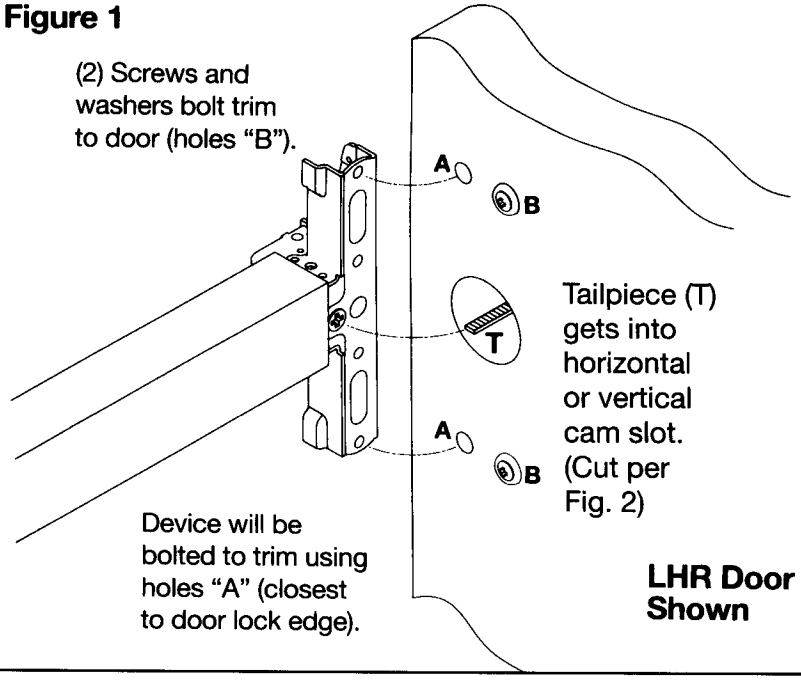

Figure 2

Trim must be unlocked (tailpiece fully extended).

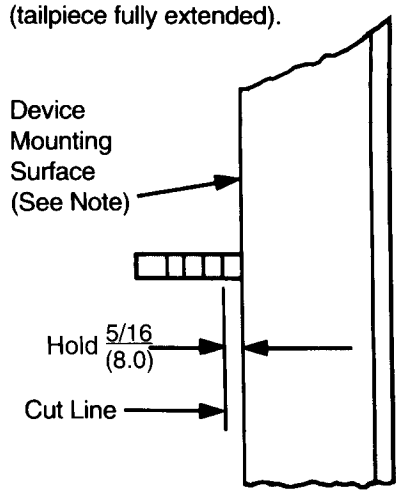

NOTE: Measure from device seat (door face or shim surface).

Cylinder locks/unlocks knob or lever.
CLASSROOM FUNCTION:
*755 Key removable with trim locked or unlocked.
STOREROOM FUNCTION:
*759 Key removable only when trim is locked.

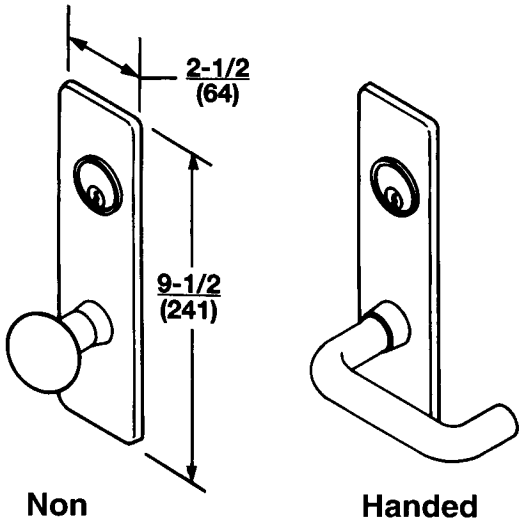

Non Handed | **Handed (RHR or LHR)**

Cylinder locks/unlocks lever.
CLASSROOM FUNCTION:
*955 Key removable with trim locked or unlocked.
STOREROOM FUNCTION:
*959 Key removable only when trim is locked.

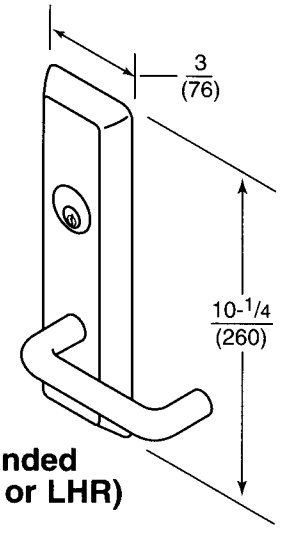

Handed (RHR or LHR)

*designated letter(s) of grip design.

A755, A759 thru PR755, PR759 Trim

L955, L959 and N955, N959 Heavy Duty Trim

INSTALLATION TEMPLATE

FM 176B 10/98
(617416019)

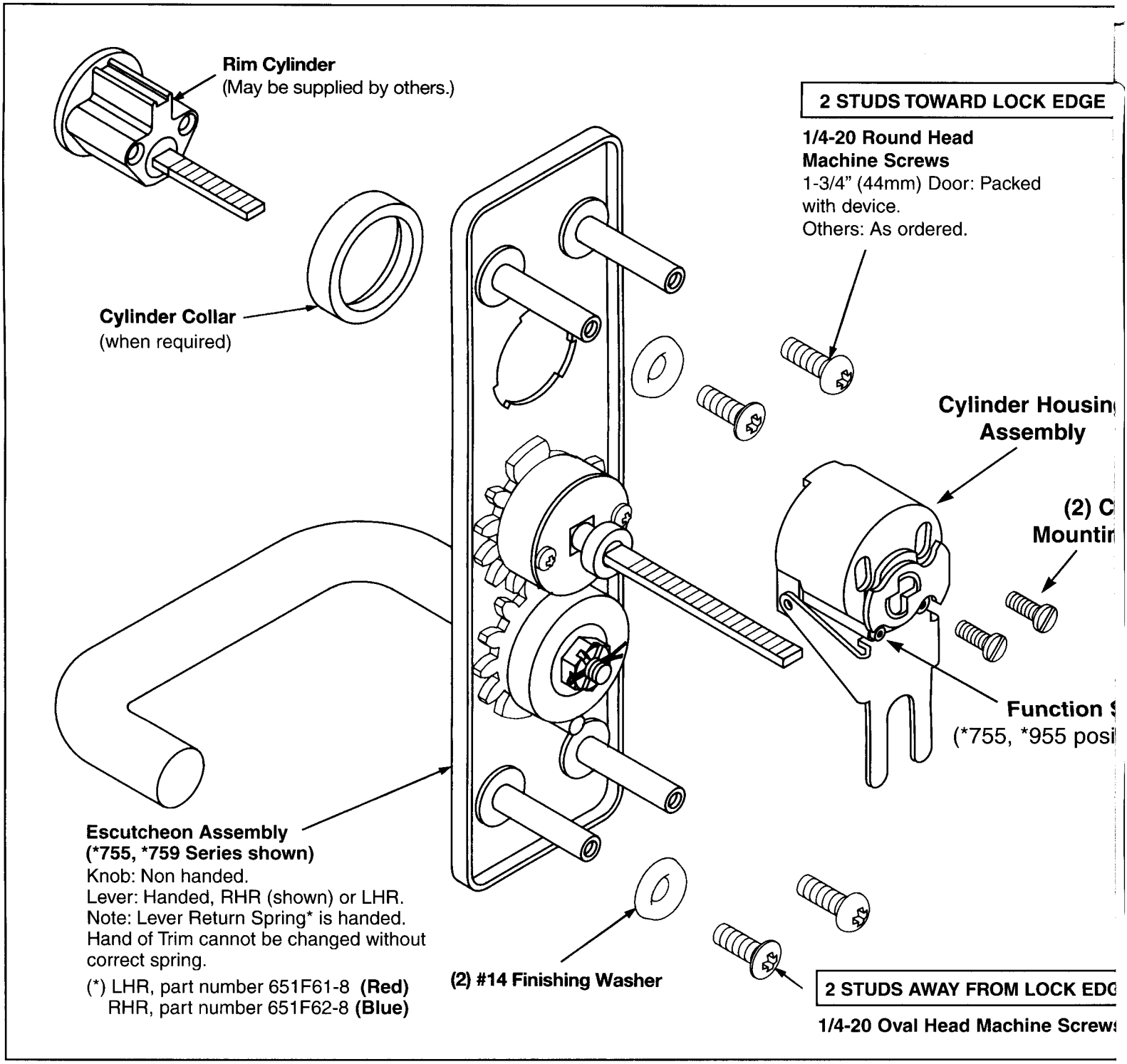
Rim Cylinder
(May be supplied by others.)
2 STUDS TOWARD LOCK EDGE
1/4-20 Round Head
Machine Screws
1-3/4" (44mm) Door: Packed
with device.
Others: As ordered.
Cylinder Collar
(when required)
Cylinder Housin
Assembly
(2) C
Mountir
Function
(*755, *955 posi
Escutcheon Assembly
(*755, *759 Series shown)
Knob: Non handed.
Lever: Handed, RHR (shown) or LHR.
Note: Lever Return Spring* is handed.
Hand of Trim cannot be changed without
correct spring.
(*) LHR, part number 651F61-8 (Red)
RHR, part number 651F62-8 (Blue)
(2) #14 Finishing Washer
2 STUDS AWAY FROM LOCK EDG
1/4-20 Oval Head Machine Screws

Trim
Assembly Instructions

1. Check cylinder components. Non-standard cylinders may require special collars.

2. Assemble cylinder. Insert Cylinder Housing prongs into Escutcheon matching notches. Pass Cylinder tailpiece thru Cylinder Collar (when required) and Cylinder Housing slot in cam. Bolt Cylinder seated in Cylinder Collar or Escutcheon recess. (DO NOT OVERTIGHTEN SCREWS).

3. Check cylinder action. Cylinder must freely rotate tailpiece into lock (cam pushing locking lever down) and unlock (shown) positions. When locking lever is engaged, it depresses the trim spindle. The knob/lever handle is, thus, disengaged.

4. Cut cylinder tailpiece. Correct length is 1/16" to 3/16" (2 to 5mm) beyond Cylinder Housing cam.

5. Determine trim function.
   *755, *955 (Classroom)
   Key locks/unlocks knob/lever handle.
   *759, *959 (Storeroom)
   Key locks/unlocks knob/lever handle.
   Key removable ONLY in lock position.

6. To change Trim Function:
   Rotate Cam Tip to down position (locked mode).
   Move function screw as shown.

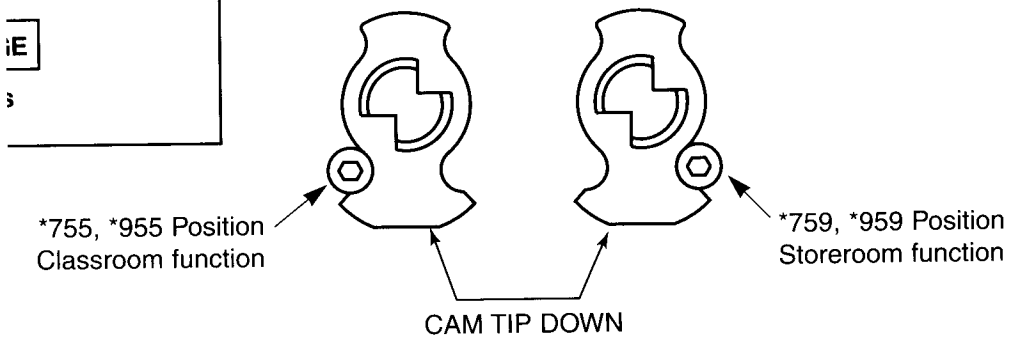

* designated letter(s) of grip design.

Corbin Russwin®

In U.S.:
Corbin Russwin, Inc.
225 Episcopal Road
Berlin, CT 06037 USA
Phone: (860) 225-7411 Fax: (860) 828-7266

In Canada:
Yale-Corbin Canada LTD.
3160 Orlando Drive
Mississauga, Ontario, Canada L4V1R5
Phone: (905) 672-6220 Fax: (905) 672-9022