Corbin Russwin

ASSA ABLOY

# ED4000, ED5000 Series

## Mechanical Pushpad Exit Devices
## Parts and Service Manual



ASSA ABLOY, the global leader
in door opening solutions

**Introduction**

Installation Notes . . . 3
How to Order Parts . . . 3
Finish Chart . . . 3

**Exit Devices**

ED5200(A), ED4200 Rim Exit Device . . . 4
ED4200M(A) Rim Exit Device . . . 5
ED5200(A), ED4200S Rim Exit Device . . . 6
ED4200SM(A) Rim Exit Device . . . 7
ED4400, ED5400(A) Surface Vertical Rod . . . 8-9
ED4400M(A) Surface Vertical Rod . . . 10-11
ED5470(B) Surface Vertical Rod . . . 12-13
ED5470(B) x M55 (Less Bottom Rod) Surface Vertical Rod . . . 14-15
ED4800, ED5800(A) Concealed Vertical Rod Exit Device . . . 16-17
ED4800M(A) Concealed Vertical Rod Exit Device . . . 18-19
ED5860(B) Concealed Exit Device . . . 20-21
ED5860B x M55 (Less Bottom Rod) Concealed Exit Device . . . 22-23
ED5600(A), ED5602(A) Mortise Exit Device . . . 24-25
ED5000DB Dummy Bar . . . 26-27
ED4000/ED5000 Pushpad Components . . . 28-29

**Trim**

910, 950, 955, 959 Trim . . . 30-31
957 Trim . . . 32-33
9M10, 9M50, 9M55, 9M57 Trim . . . 34-35
F950, F957, F9M57 Trim . . . 36-37
910, 950, 955, 959 Parabolic Trim . . . 38-39
957 Parabolic Trim . . . 40-41
9M10, 9M50, 9M55, 9M57 Parabolic Trim . . . 42-43
F950, F957, F9M57 Parabolic Trim . . . 44-45
TH910, TH950, TH955, TH957, TH959 Trim . . . 46-47
TH9M10, TH9M55, TH9M57 Trim . . . 48-49
P950, P957, P9M57 Trim . . . 50
P1050, P1057 Trim . . . 51
810, 850, 855, 859 Trim . . . 52-53
F450, F457, 0810, 0855, 0859 Trim . . . 54-55
T1455, T1410, T1459 Trim . . . 56-57
01455, 01459, 01410 Trim . . . 58-59
T1450, T1457 Trim . . . 60-61
Muséo Levers . . . 62

**Cylinders** . . . 63-64
**Strikes** . . . 65
**Accessories** . . . 66
**Handing Instructions** . . . 67-68
**Surface Vertical Rod Exit Devices** . . . 69
**Concealed Vertical Rod Exit Devices** . . . 70
**Troubleshooting** . . . 71

**Installation Notes**

1. Any retrofit or other field modification to a fire rated opening can potentially impact the fire rating of the opening, and Yale Locks & Hardware makes no representations or warranties concerning what such impact may be in any specific situation. When retrofitting any portion of an existing fire rated opening, or specifying and installing a new fire rated opening, please consult with a code specialist or local code official (Authority Having Jurisdiction) to ensure compliance with all applicable codes and ratings.
2. Refer to the templates and installation instructions for complete door preparation and installation requirements.
3. Machine screws are provided for steel reinforced doors, threaded-to-the-head AB Type screws are provided for wood door applications. In addition, sex nuts and bolts are provided for fire rated devices and are optional for non-rated devices. It is recommended that sex nuts and bolts be used for all exit device applications. This will improve the performance and extend the life of the product.

**How to Order Parts**

1. In order to simplify the ordering procedure and maintain regulatory compliance, parts are only available as listed
2. To order parts, provide the appropriate quantity, part number, finish, hand (when required) and description as directed and illustrated below.

**For example, use the following configuration to order:**

**A) ten escutcheon assemblies (page 30) in satin chrome**

**B) one surface vertical rod latch cover (page 10) in bright brass**

| | Quantity | Part Number | Finish | Hand | Description |
|---|---|---|---|---|---|
| A | 10 | 677F01 | 626 | — | Escutcheon Assemblies |
| B | 1 | 650F64 | 605 | — | Top Latch Cover |

For assistance, contact your authorized Corbin Russwin distributor, sales agency or visit our website at www.corbinrusswin.com.

**Finishes**

| ANSI/BHMA Code | Finish Description |
|---|---|
| 605 | Bright Brass, Clear Coated |
| 606 | Satin Brass, Clear Coated |
| 611 | Bright Bronze, Clear Coated |
| 612 | Satin Bronze, Clear Coated |
| 613 | Dark Oxidized Satin Bronze, Oil Rubbed |
| 613E | Dark Oxidized Satin Bronze, Equivalent |
| 618 | Bright Nickel, Clear Coated |
| 619 | Satin Nickel Plated, Clear Coated |
| 625 | Bright Chrome Plated |
| 626 | Satin Chrome Plated |
| 626C | Satin Chromium Plated with MicroShield® |
| 629 | Bright Stainless Steel |
| 630 | Satin Stainless Steel |
| 630C | Satin Stainless Steel with MicroShield® |
| 722 | Black Oxidized Satin Bronze, Oil Rubbed |

Finish available with MicroShield® antimicrobial coating, additional finishes by special application. Consult factory for availability.

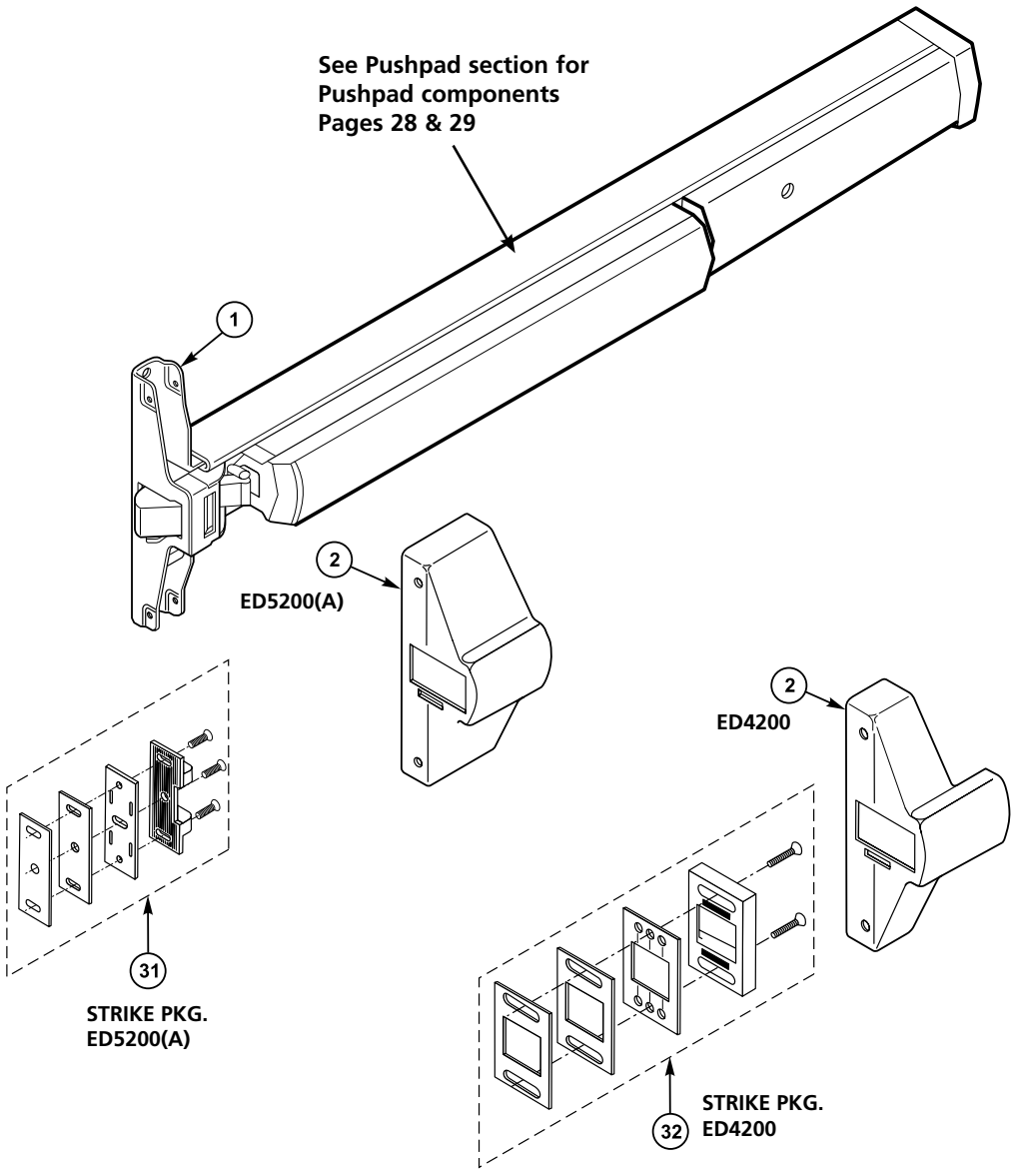


| Item | Part No. | Description |
|---|---|---|
| 1 | | Latch Assembly |
| | 650F358 | ED5200 |
| | 650F368 | ED5200A |
| | 650F378 | ED4200 |
| 2 | | Cover |
| | 650F00 x Fin | ED5200 |
| | ***Not Available*** | ED5200(A) Ⓤ |
| | 650F03 x Fin | ED4200 |
| 31 | 650F308 | ED5200(A) Strike Packet |
| 32 | 650F318 | ED4200 Strike Packet |
| 33 | 655F718 | (S02) ED5200 Rim x VR Strike ***Not Shown*** |

**Difference in Latch Assemblies**

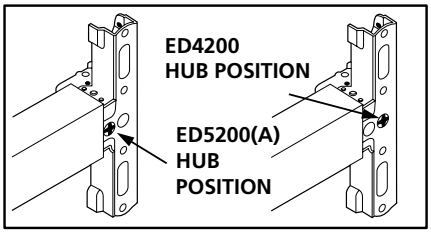

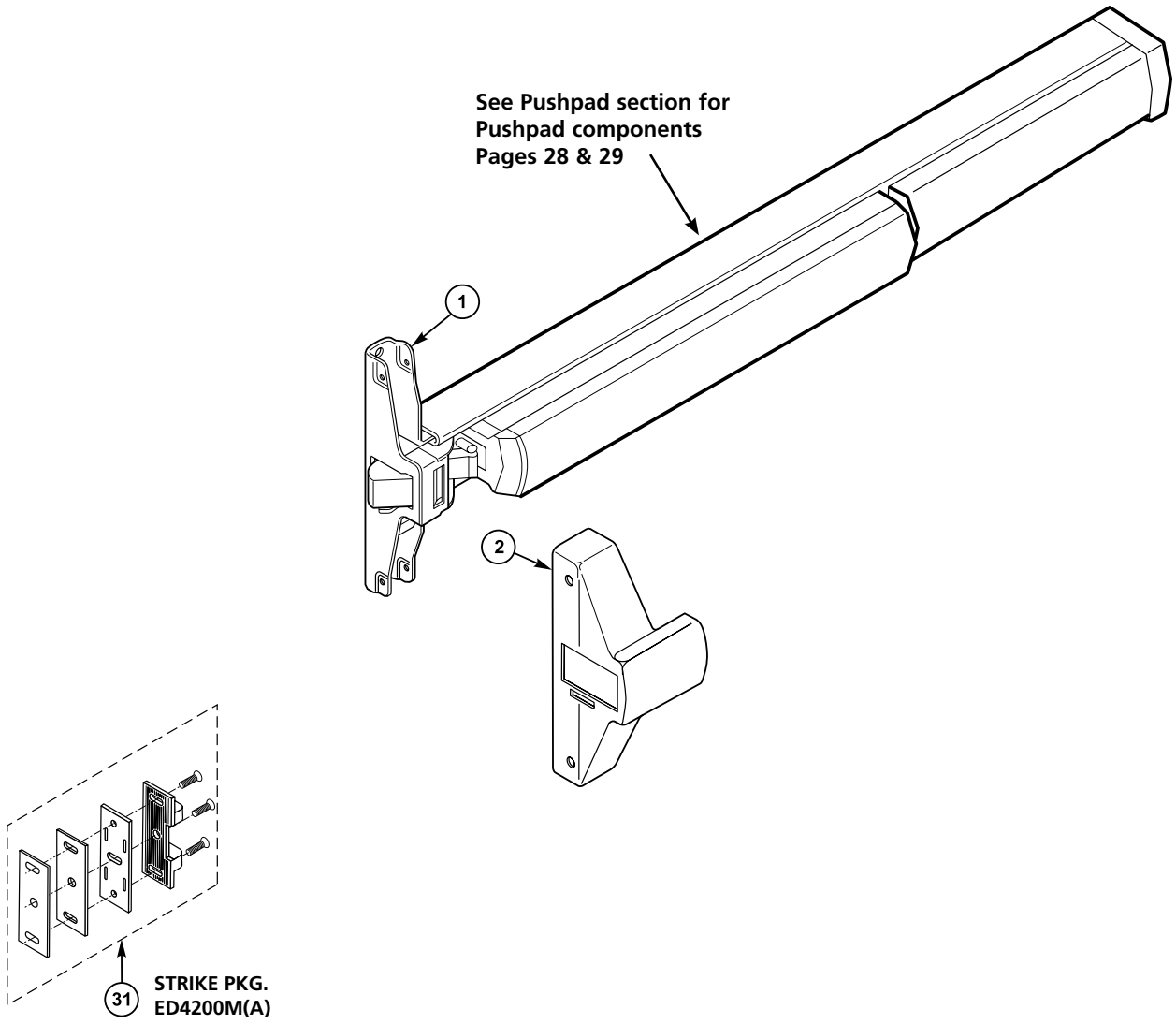


| Item | Part No. | Description |
|---|---|---|
| 1 | | Latch Assembly |
| | 650F378 | ED4200M |
| | 756F008 | ED4200MA |
| 2 | 650F03 x Fin | Cover ED4200M only |
| | ***Not Available*** | Cover ED4200MA |
| 31 | 650F308 | ED4200M(A) Strike Packet |

**Latch Assembly**

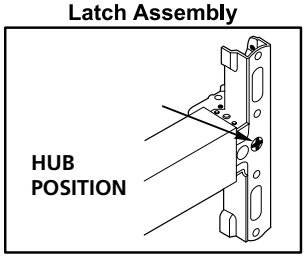

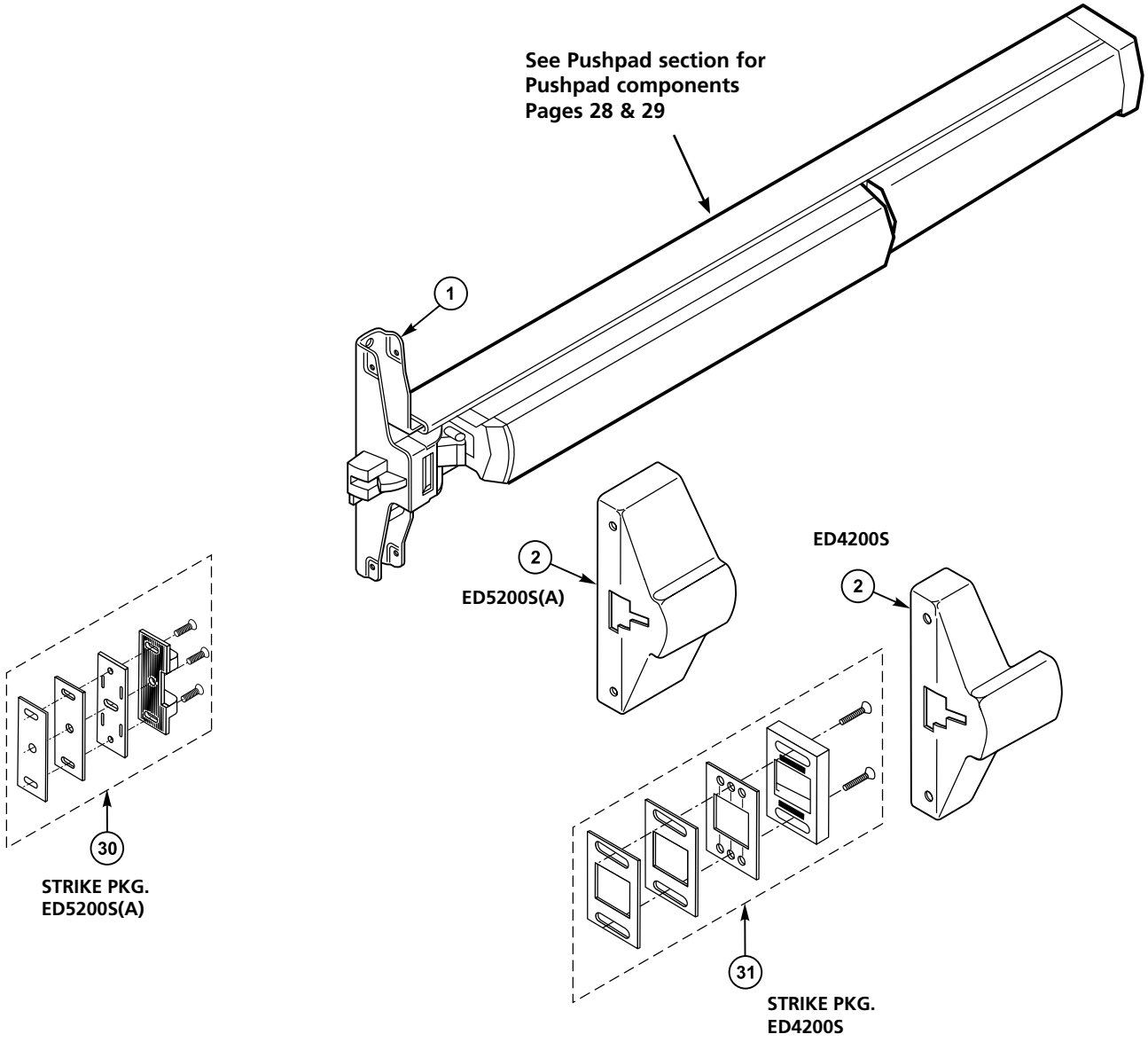


| Item | Part No. | Description |
|---|---|---|
| 1 | 681F608<br>681F618 | Latch Assembly<br>ED5200S, ED5200SA<br>ED4200S |
| 2 | 681F62 x Fin<br>***Not Available***<br>681F63 x Fin | Cover<br>ED5200S<br>ED5200SA (UL)<br>ED4200S |
| 30 | 730F778 | ED5200S(A) Strike Packet |
| 31 | 650F318 | ED4200S Strike Packet |
| 33 | 655F718 | ED5200S Rim x VR Strike (S02)<br>***Not Shown*** |

**Difference in Latch Assemblies**

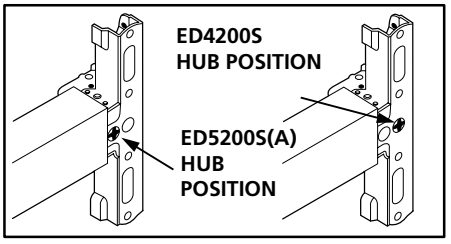

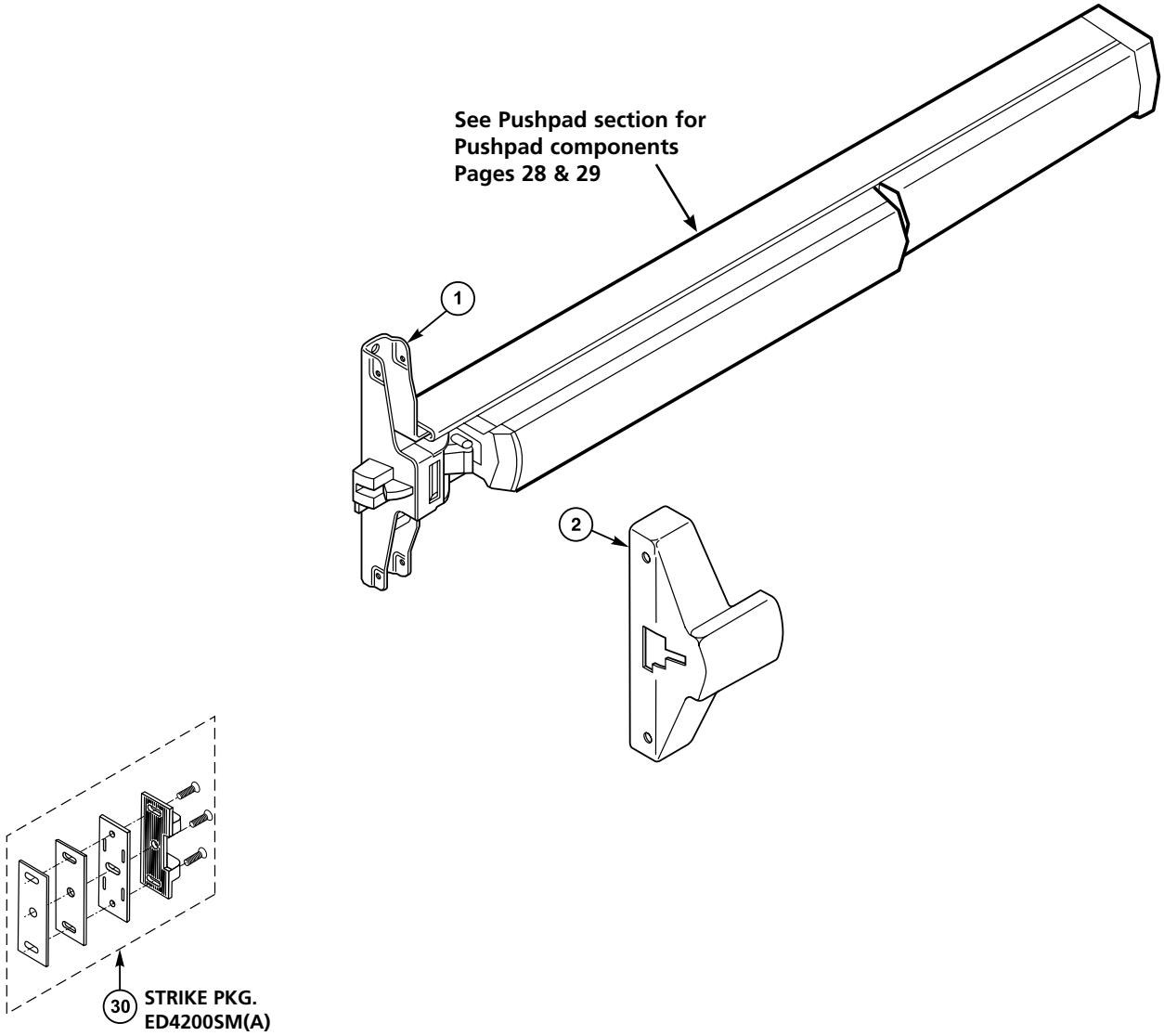


| Item | Part No. | Description |
|---|---|---|
| 1 | 681F618 | Latch Assembly<br>ED4200SM(A) |
| 2 | 681F63 x Fin | Cover<br>ED4200SM |
| 30 | 730F778 | ED4200SM(A) Strike Packet |

**Latch Assembly**

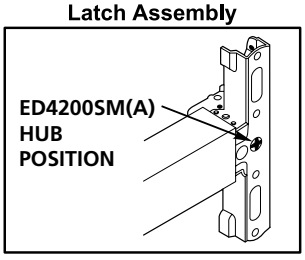

| Item | Part No. | Description |
|---|---|---|
| | | Active Head |
| | 650F388 | ED5400, ED5400A RHR |
| 1 | 650F398 | ED5400, ED5400A LHR |
| | 650F408 | ED4400 RHR |
| | 650F418 | ED4400 LHR |
| | | Cover |
| | 650F01 x Fin | ED5400 |
| 2 | ***Not Available*** | ED5400A (UL) |
| | 650F04 x Fin | ED4400 |
| 3 | 650F298 x Fin | Sex Nut Pack (2) required |
| | | Screw Packet, Cover |
| 23 | 704F63 x Fin | #8-32 x 5/16" |
| | | UFPHMS (5) |
| 32 | 650F64 x Fin | Cover, Top & Bottom |
| | | Latches (2) |
| | | Top Latch |
| 33 | 650F558 | ED5400, ED4400 |
| | 650F568 | ED5400A |

| Item | Part No. | Description |
|---|---|---|
| | 650F578 | SVR Pack |
| | | ***Consists of the following:*** |
| | | Top Mtg. Plate |
| | | Bottom Mtg. Plate |
| | | Top Rod Connector |
| 34 | | Rod Connecting Pin |
| | | Drill Jig |
| | | Floor Bolt |
| | 650F548 | Strike - |
| | | Latch Mounting Screw Packet |
| | | Top Strike Packet |
| | | Bottom Bolt Case |
| 35 | 650F588 | ED5400, ED4400 |
| | 650F598 | ED5400A |
| 36 | 650F60 x Fin | Top Rod |
| 37 | 649F99 x Fin | Bottom Rod Assembly |
| 39 | 650F62 x Fin | Rod Guide Packet |
| 40 | 650F978 | Pillow Block Packet ED4400 |
| 41 | 675F99 x Fin | Rod Guide Cover (2) |
| 42 | 654F208 | Wood Screw Packet<br>***Not Shown*** |

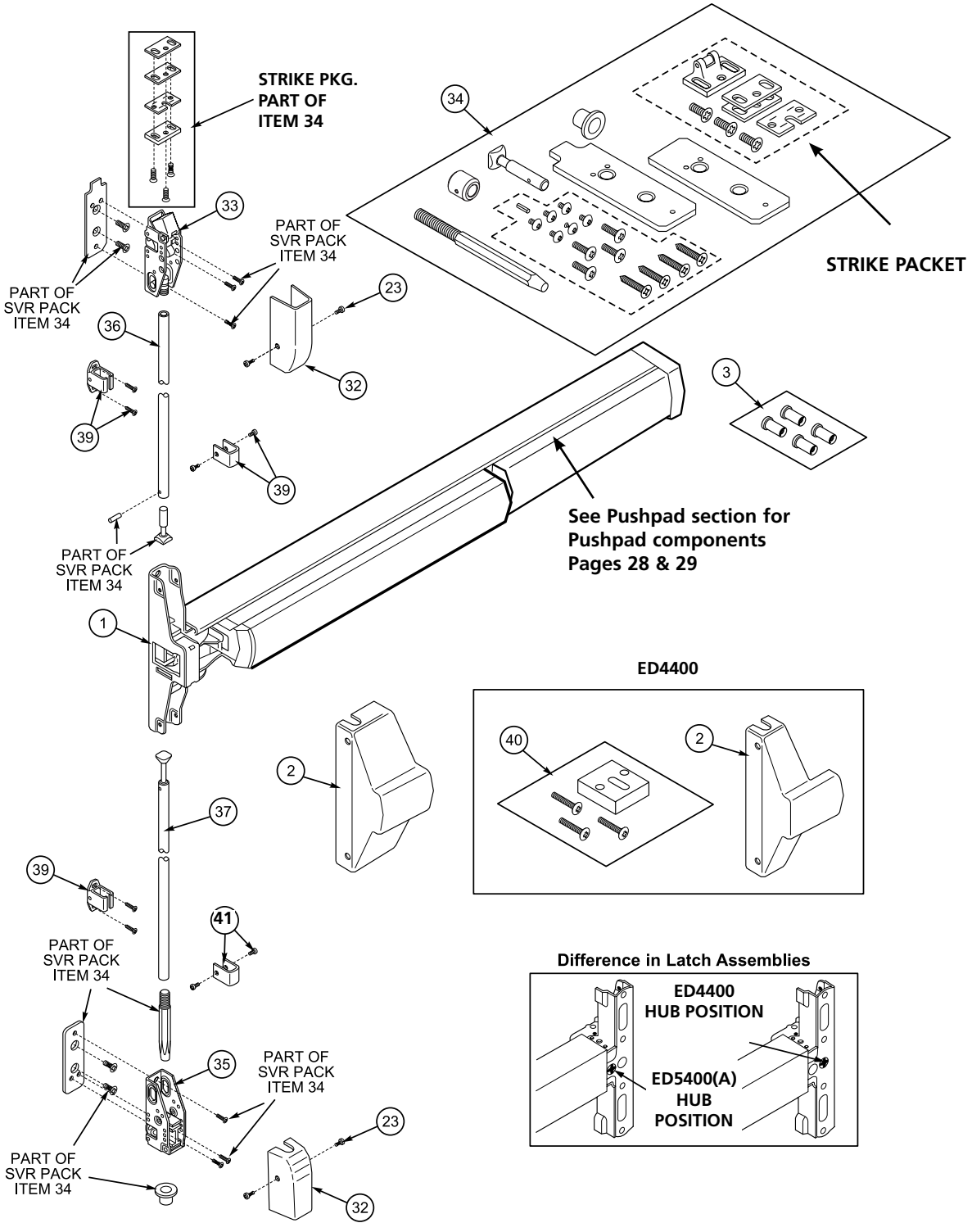
STRIKE PKG.
PART OF
ITEM 34
34
STRIKE PACKET
33
PART OF
SVR PACK
ITEM 34
PART OF
SVR PACK
ITEM 34
23
36
32
39
39
3
See Pushpad section for
Pushpad components
Pages 28 & 29
PART OF
SVR PACK
ITEM 34
1
ED4400
2
40
2
37
39
41
PART OF
SVR PACK
ITEM 34
Difference in Latch Assemblies
ED4400
HUB POSITION
ED5400(A)
HUB
POSITION
35
PART OF
SVR PACK
ITEM 34
PART OF
SVR PACK
ITEM 34
23
32

| Item | Part No. | Description |
|---|---|---|
| 1 | 650F408 | Active Head<br>ED4400M(A)<br>(Must Specify Hand) |
| 2 | 650F04 x Fin<br>***Not Available*** | Cover<br>ED4400M<br>ED4400M(A) (UL) |
| 3 | 650F298 | Sex Nut Pack (4) 2 required<br>Fire Rated Only or M54 option |
| 23 | 704F63 x Fin | Screw Packet, Cover<br>#8-32 x 5/16"<br>UFPHMS (5) |
| 32 | 650F64 x Fin | Cover, Top & Bottom Latches (2) |
| 33 | 650F558<br>650F568 | Top Latch<br>ED4400M<br>ED4400MA |
| 34 | 650F578<br><br><br><br><br><br><br><br><br><br><br>652F298<br>650F548 | SVR Pack<br>***Consists of the following:***<br>Top Mtg. Plate<br>Bottom Mtg. Plate<br>Top Rod Connector<br>Rod Connecting Pin<br>Drill Jig<br>Floor Bolt<br>Strike<br>Latch Mounting Screw Pack<br>Sex Nut Pack (4) Fire Rated Only<br>Top Strike Packet |

| Item | Part No. | Description |
|---|---|---|
| 35 | 650F588<br>650F598 | Bottom Bolt Case<br>ED4400M<br>ED4400M(A) |
| 36 | 650F60 x Fin | Top Rod |
| 37 | 649F99 x Fin | Bottom Rod Assembly |
| 39 | 650F62 x Fin | Rod Guide Packet<br>***Consists of the following:***<br>Guide, Rod (1)<br>Screw, #8 x 1/2 (2) RPHMS (4)<br>Screw, #8-32 x 1/4" (2)<br>FPHMS (4) |
| 40 | 675F99 x Fin | Rod Guide Cover (2) |
| 41 | 654F208 | Wood Screw Packet<br>***Not Shown*** |

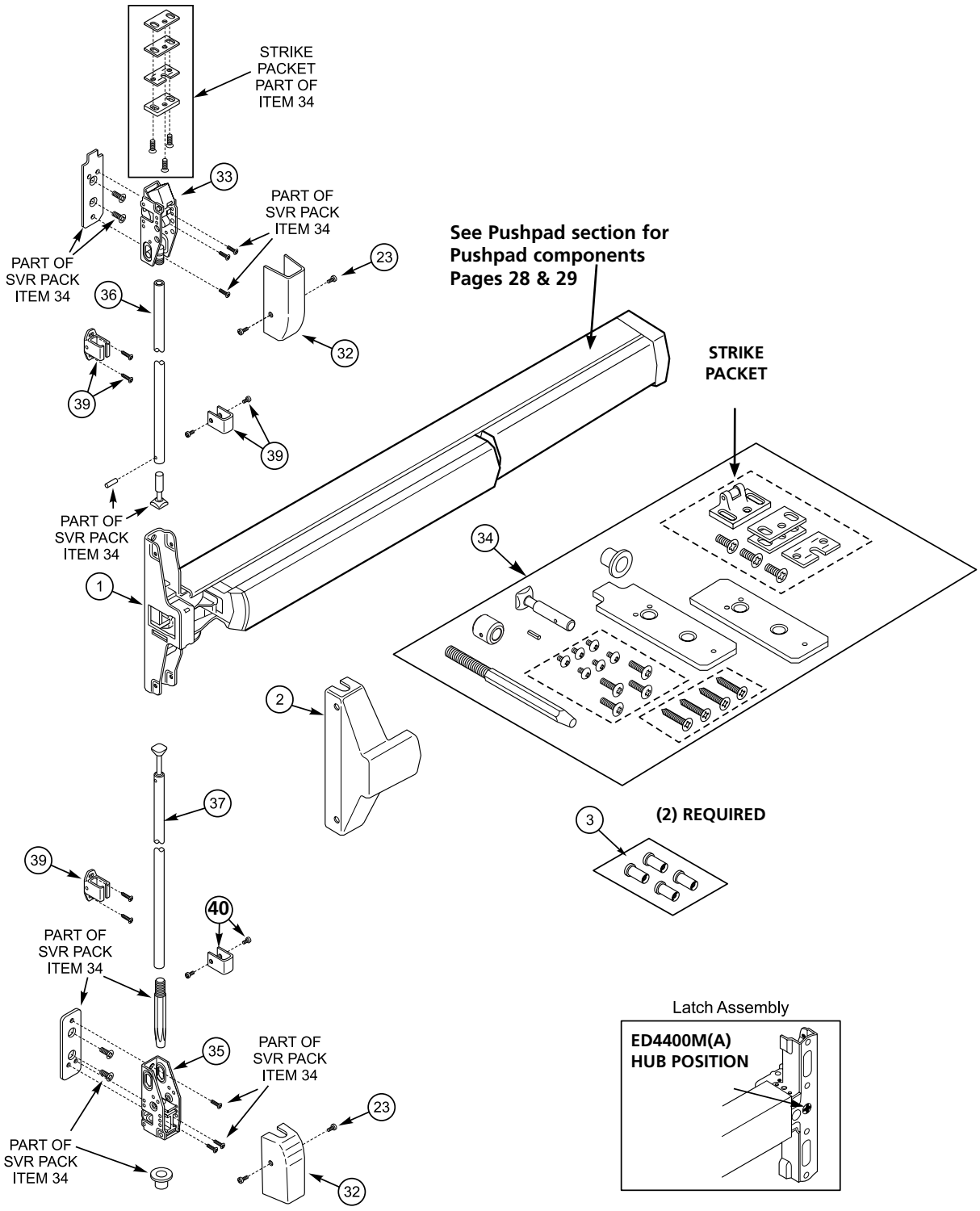
STRIKE PACKET PART OF ITEM 34
33
PART OF SVR PACK ITEM 34
PART OF SVR PACK ITEM 34
23
36
32
39
39
PART OF SVR PACK ITEM 34
1
See Pushpad section for Pushpad components Pages 28 & 29
STRIKE PACKET
34
2
3
(2) REQUIRED
37
39
40
PART OF SVR PACK ITEM 34
35
PART OF SVR PACK ITEM 34
PART OF SVR PACK ITEM 34
23
32
Latch Assembly
ED4400M(A) HUB POSITION

| Item | Part No. | Description |
|---|---|---|
| 1 | | Active Head |
| | 650F388 | ED5470(B) RHR |
| | 650F398 | ED5470(B) LHR |
| 2 | | Cover |
| | 650F01 x Fin | ED5470 |
| | ***Not Available*** | ED5470B (UL) |
| 3 | 652F298 | Sex Nut Pack (4) (Fire Rated Only) or M54 Quick Code |
| 4 | 684F42 x Fin | Rod Extension Assy., 24" |
| 5 | 655F17 x Fin | Rod Extension Assy., 12" |
| 23 | 704F63 x Fin | Screw Packet, Cover<br>#8-32 x 5/16"<br>UFPHMS (5) |
| 32 | 650F64 x Fin | Cover, Top & Bottom Latches (2) |
| 33 | | Top Latch |
| | 650F558 | ED5470 |
| | 650F568 | ED5470B |
| 34 | 697F978 | SVR Pack<br>***Consists of the following:***<br>Top Mtg. Plate<br>Bottom Mtg. Plate<br>Top Rod Connector<br>Rod Connecting Pin<br>Drill Jig<br>Floor Bolt<br>Strike<br>Latch Mounting Screw Pack<br>Latch Mounting Screw (4) (Wood Door Panic) |
| | 681F708 | Top Strike Packet |

| Item | Part No. | Description |
|---|---|---|
| 35 | | Bottom Bolt Case |
| | 650F588 | ED5470 |
| | 650F598 | ED5470B |
| 36 | 650F60 x Fin | Top Rod |
| 37 | 649F99 x Fin | Bottom Rod Assembly |
| 39 | 650F62 x Fin | Rod Guide Packet |
| 40 | 675F99 x Fin | Rod Guide Cover (2-covers) |
| 41 | 654F208 | Wood Screw Packet<br>***Not Shown*** |

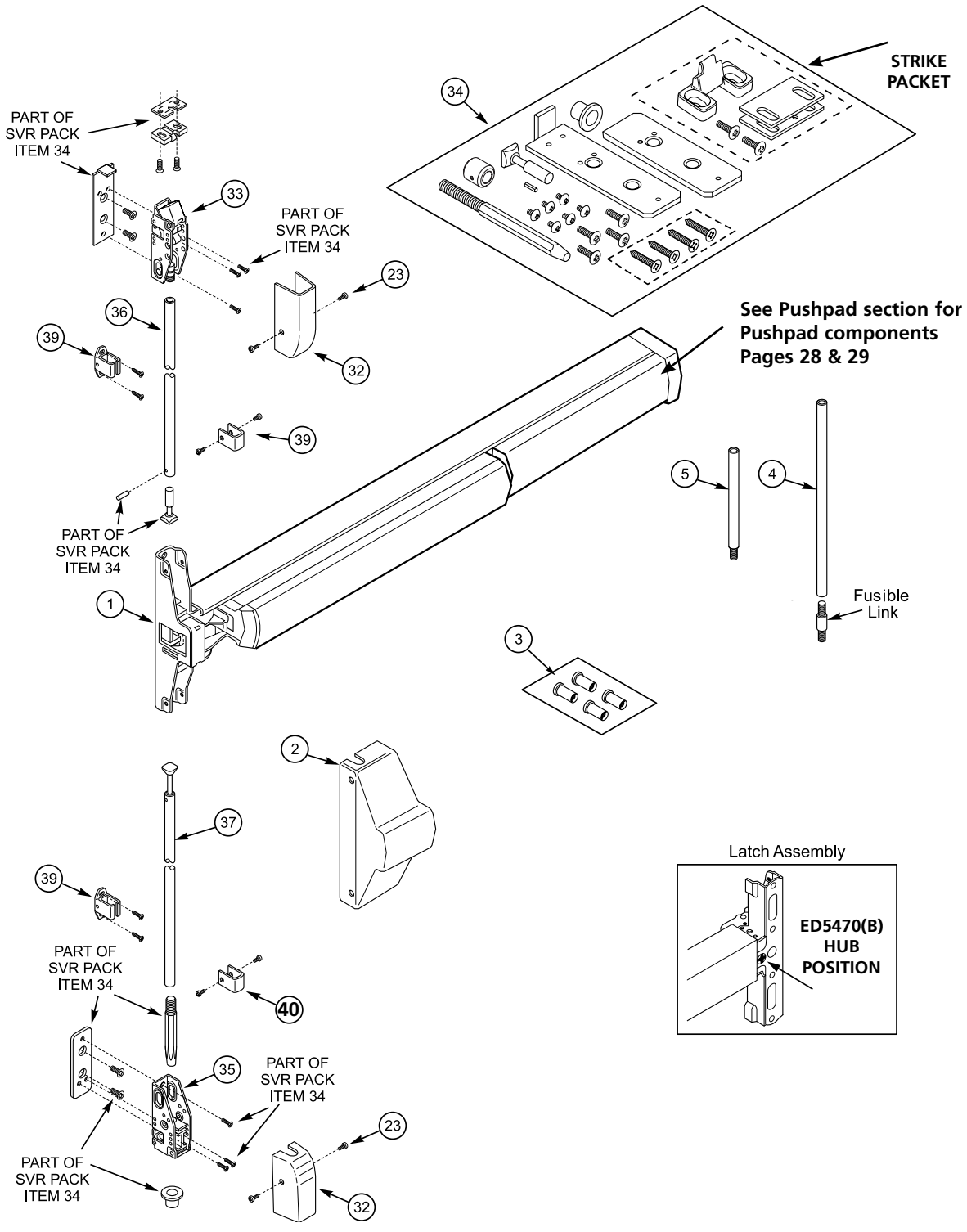
STRIKE PACKET
34
PART OF SVR PACK ITEM 34
33
PART OF SVR PACK ITEM 34
23
36
39
32
See Pushpad section for Pushpad components Pages 28 & 29
39
5
4
PART OF SVR PACK ITEM 34
1
Fusible Link
3
2
37
39
PART OF SVR PACK ITEM 34
40
35
PART OF SVR PACK ITEM 34
23
PART OF SVR PACK ITEM 34
32
Latch Assembly
ED5470(B) HUB POSITION

| Item | Part No. | Description |
|---|---|---|
| 1 | | Active Head |
| | 650F388 | ED5470(B) RHR |
| | 650F398 | ED5470(B) LHL |
| 2 | | Cover |
| | 650F01 x Fin | ED5470 |
| | ***Not Available*** | ED5470B |
| 3 | 652F298 | Sex Nut Pack (4), Fire Only & M54 |
| 4 | 684F42 x Fin | Rod Extension Assy., 24" |
| 5 | 655F17 x Fin | Rod Extension Assy., 12" |
| 23 | 704F63 x Fin | Screw Packet, Cover<br>#8-32 x 5/16"<br>UFPHMS (5) |
| 32 | 650F64 x Fin | Cover, Top & Latch |
| 33 | 650F558 | Top Latch, ED5470 |
| | 650F568 | Top Latch, ED5470B |

| Item | Part No. | Description |
|---|---|---|
| 34 | 654F158 | SVR Pack<br>***Consists of the following:***<br>Top Mtg. Plate<br>Top Rod Connector<br>Rod Connecting Pin<br>Drill Jig<br>Latch Mounting Screw Pack<br>Latch MountingScrew(2)<br>(wood doors, panic) |
| | 681F708 | Top Strike Packet |
| 36 | 650F60 x Fin | Top Rod |
| 39 | 650F62 x Fin | Rod Guide Packet<br>***Consists of the following:***<br>Guide, Rod (1)<br>Cover, Rod Guide (1)<br>Screw, #8 x 1/2 (2) RPHMS (4)<br>Screw, #8-32 x 1/4" (2) FPHMS (4) |
| 55 | 744F688 x Fin | Popper Packet [Fire Rated (B) Only] |
| 40 | 675F99 x Fin | Rod Guide Cover |
| 41 | 654F208 | Wood Screw Packet<br>***Not Shown*** |

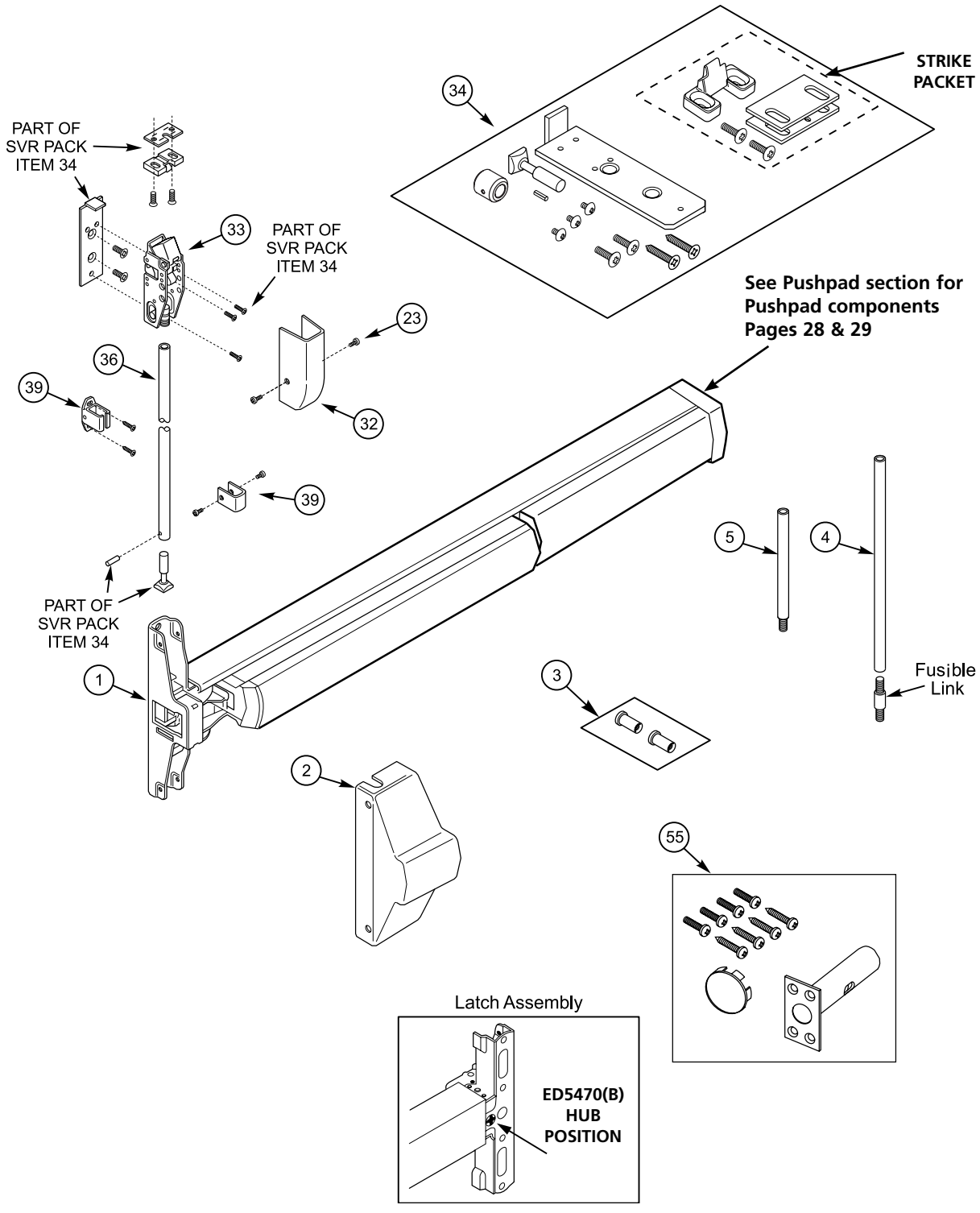
STRIKE PACKET
34
PART OF SVR PACK ITEM 34
33
PART OF SVR PACK ITEM 34
23
36
39
32
39
See Pushpad section for Pushpad components Pages 28 & 29
5
4
PART OF SVR PACK ITEM 34
1
3
Fusible Link
2
55
Latch Assembly
ED5470(B) HUB POSITION

| Item | Part No. | Description |
|---|---|---|
| | | Active Head |
| 1 | 650F438 | ED5800(A) RHR |
| | 650F448 | ED5800(A) LHR |
| | 650F458 | ED4800 RHR |
| | 650F468 | ED4800 LHR |
| | | Cover, Latch Assembly |
| 2 | 650F02 x Fin | ED5800 |
| | ***Not Available*** | ED5800A |
| | 650F05 x Fin | ED4800 |
| | | Bottom Bolt Case |
| 35 | 650F748 | ED5800 |
| | 650F758 | ED5800A |
| | 650F768 | ED4800 |
| 36 | 650F808 | Top Rod |
| | 707F268 | CVR Pack for ED5800(A) & ED4800 |
| | | ***Consists of the following:*** |
| | | Floor Bolt |
| | | Strike |
| | 650F548 | Top Strike Packet |
| 46 | | Pin, Rod Yoke (2) |
| | | Set Screw, Yoke Pin |
| | | Cotter Pin (5) |
| | | Ring, Retaining (2) |
| | | 2" Temp Screw (2) |
| | | Screw Pack |
| | | Top Latch & Bracket Assembly |
| 47 | 650F718 | ED5800 |
| | 650F728 | ED5800A |
| | 650F738 | ED4800 |
| 49 | 650F798 | Bottom Rod & Coupler Assembly |
| 51 | 650F818 | Top Rod Tube |
| 52 | 707F257 | Arm & Bracket Assy (2) |
| 53 | 654F208 | Wood Screw Packet<br>***Not Shown*** |

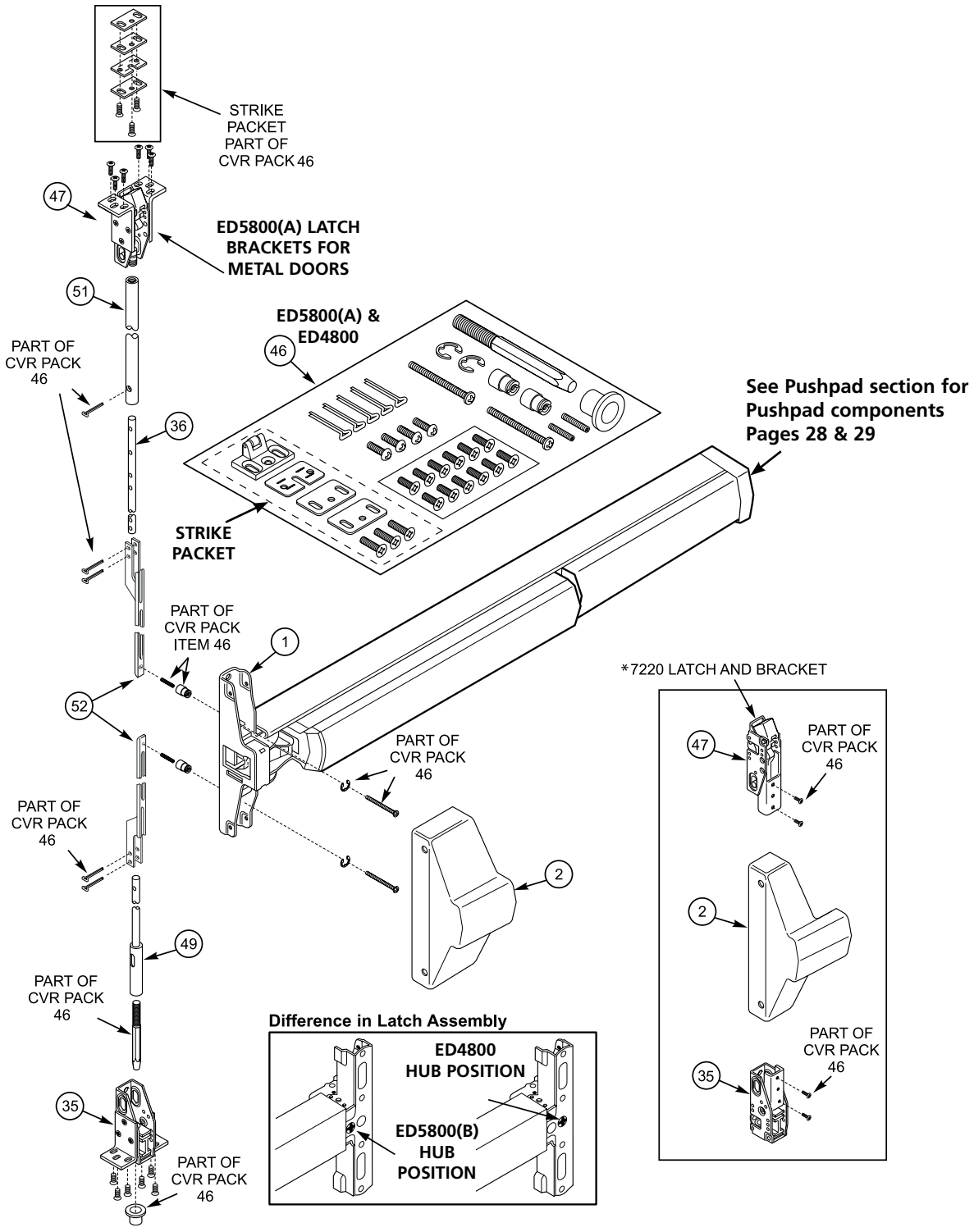
STRIKE PACKET PART OF CVR PACK 46
47
ED5800(A) LATCH BRACKETS FOR METAL DOORS
51
PART OF CVR PACK 46
ED5800(A) & ED4800
46
See Pushpad section for Pushpad components Pages 28 & 29
36
STRIKE PACKET
PART OF CVR PACK ITEM 46
1
52
PART OF CVR PACK 46
PART OF CVR PACK 46
2
49
PART OF CVR PACK 46
35
PART OF CVR PACK 46
Difference in Latch Assembly
ED4800 HUB POSITION
ED5800(B) HUB POSITION
*7220 LATCH AND BRACKET
47
PART OF CVR PACK 46
2
35
PART OF CVR PACK 46

| Item | Part No. | Description |
|---|---|---|
| | | Active Head |
| 1 | 650F458 | ED4800M(A) RHR |
| | 650F468 | ED4800M(A) LHR |
| | | Cover, Latch Assembly |
| 2 | 650F05 x Fin | ED4800M |
| | ***Not Available*** | ED4800MA Ⓤ |
| | | Bottom Bolt Case |
| 35 | 650F748 | ED4800M |
| | 650F758 | ED4800MA |
| 36 | 650F808 | Top Rod |
| | 707F268 | CVR Pack |
| | | ***Consists of the following:*** |
| | | Floor Bolt |
| | | Strike |
| | 650F548 | Top Strike Packet |
| 46 | | Pin, Rod Yoke (2) |
| | | Set Screw, Yoke Pin |
| | | Cotter Pin (5) |
| | | Ring, Retaining (2) |
| | | Screw Pack |
| | | 2" Temp Screw (2) |
| | | Top Latch & Bracket Assembly |
| 47 | 650F748 | ED4800M |
| | 650F758 | ED4800MA |
| 49 | 650F798 | Bottom Rod & Coupler Assembly |
| 51 | 650F818 | Top Rod Tube |
| 52 | 707F257 | Arm & Bracket Assy (2) |
| 53 | 654F208 | Wood Screw Packet<br>***Not Shown*** |

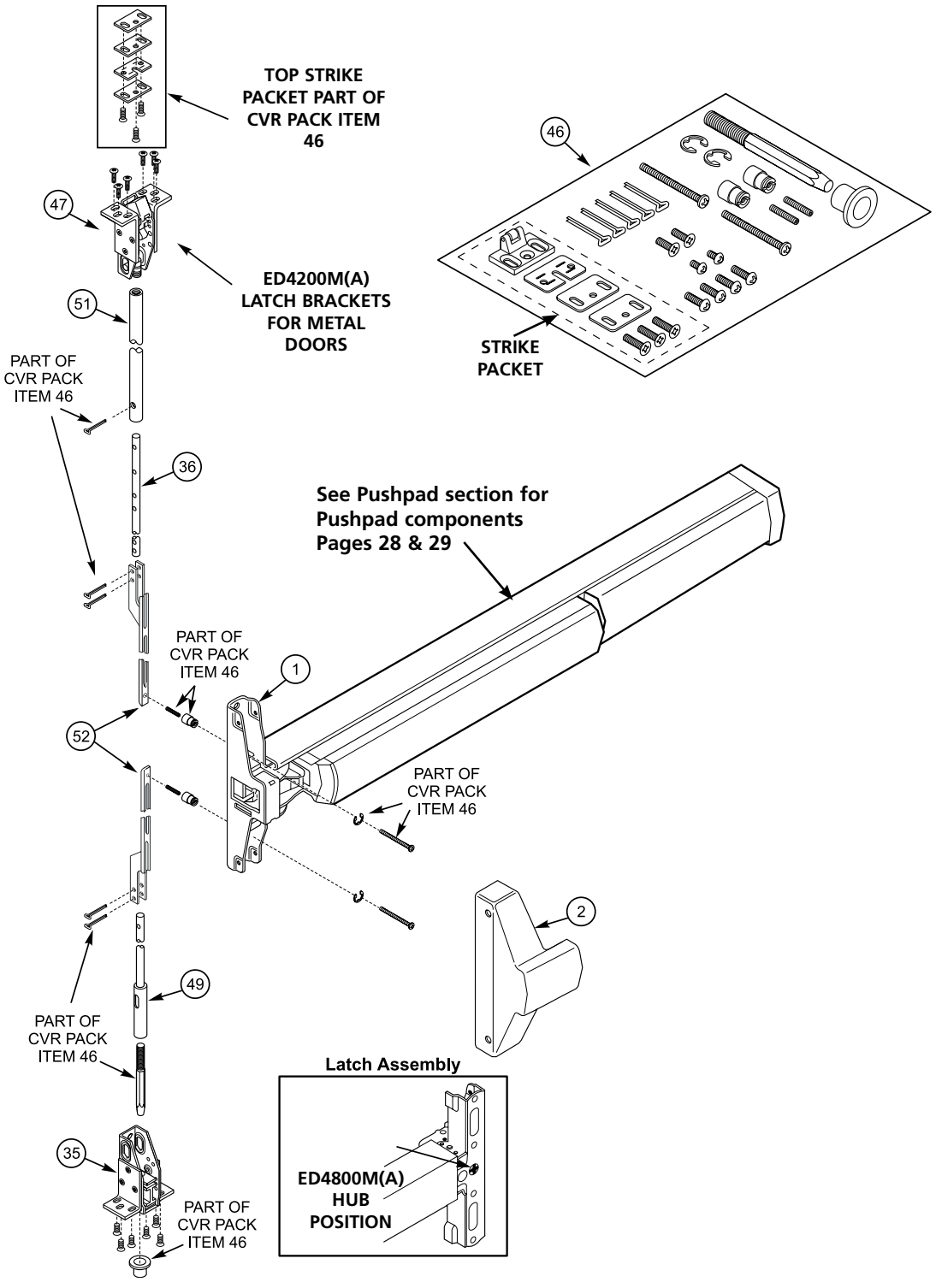
TOP STRIKE PACKET PART OF CVR PACK ITEM 46
46
47
ED4200M(A) LATCH BRACKETS FOR METAL DOORS
51
STRIKE PACKET
PART OF CVR PACK ITEM 46
36
See Pushpad section for Pushpad components Pages 28 & 29
PART OF CVR PACK ITEM 46
1
52
PART OF CVR PACK ITEM 46
2
49
PART OF CVR PACK ITEM 46
Latch Assembly
35
ED4800M(A) HUB POSITION
PART OF CVR PACK ITEM 46

| Item | Part No. | Description |
|---|---|---|
| | | Latch Case Assembly |
| 1 | 650F438 | ED5860(B) RHR |
| | 650F448 | ED5860(B) LHR |
| | | Cover, Latch Assembly |
| 2 | 650F02 x Fin | ED5860 |
| | ***Not Available*** | ED5860B (UL) |
| 35 | 650F748 | Bottom Bolt Case ED5860 |
| | 650F758 | Bottom Bolt Case ED5860B |
| 36 | 650F808 | Top Rod |
| | | Rod Extension Assembly |
| 37 | 655F17 x Fin | 12" Rod Assembly |
| | 684F42 x Fin | 24" Rod Assembly |
| 46 | 698F048 | CVR Pack |
| | | ***Consists of the following:*** |
| | | Floor Bolt |
| | | Strike |
| | 681F778 | Top Strike Packet |
| | | Pin, Rod Yoke (2) |
| | | Set Screw, Yoke Pin |
| | | Yoke Pin Spacer (2) |
| | | Cotter Pin (5) |
| | | Ring, Retaining (2) |
| | | Screw Pack |
| | | 2" Temp Screw (2) |
| 49 | 650F798 | Bottom Rod & Coupler Assembly |
| 51 | 650F818 | Top Rod Tube |
| 52 | 707F257 | Arm & Bracket Assy. (2) |
| 53 | 654F208 | Wood Screw Packet<br>***Not Shown*** |

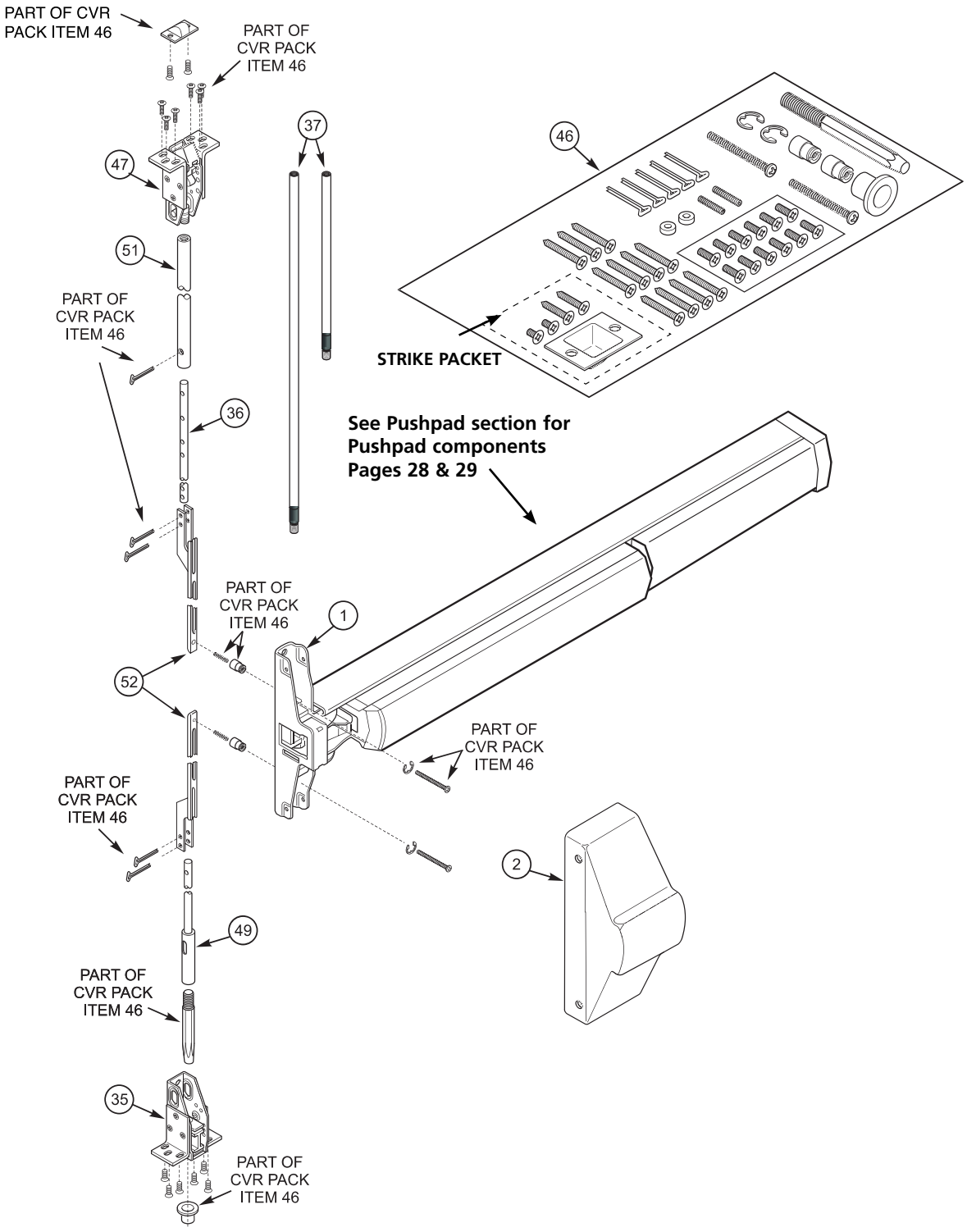
PART OF CVR PACK ITEM 46
PART OF CVR PACK ITEM 46
37
46
47
51
PART OF CVR PACK ITEM 46
STRIKE PACKET
36
See Pushpad section for Pushpad components Pages 28 & 29
PART OF CVR PACK ITEM 46
1
52
PART OF CVR PACK ITEM 46
PART OF CVR PACK ITEM 46
2
49
PART OF CVR PACK ITEM 46
35
PART OF CVR PACK ITEM 46

| Item | Part No. | Description |
|---|---|---|
| | | Latch Case Assembly |
| 1 | 650F438 | ED5860(B) RHR |
| | 650F448 | ED5860(B) LHR |
| | | Cover, Latch Assembly |
| 2 | 650F02 x Fin | ED5860 |
| | ***Not Available*** | ED5860B (UL) |
| 36 | 650F808 | Top Rod |
| | | Rod Extension Assembly |
| 37 | 655F17 x Fin | 12" Rod Assembly |
| | 684F42 x Fin | 24" Rod Assembly |
| 46 | 698F058 | CVR Pack |
| | | ***Consists of the following:*** |
| | 681F778 | Top Strike Packet |
| | | Pin, Rod Yoke (1) |
| | | Set Screw, Yoke Pin |
| | | Yoke Pin Spacer (1) |
| | | Cotter Pin (3) |
| | | Ring, Retaining (1) |
| | | Screw, 10-24 x 1/2 FHM-PH (6) |
| | | 8x32x2 Temp Screw (1) |
| 47 | 681F768 | Top Latch & Bracket Assembly, ED5860(B) |
| 51 | 650F818 | Top Rod Tube |
| 52 | 707F257 | Arm & Bracket Assembly (1) |
| 55 | 744F688 | Popper Pack (Fire Rated Only) |
| 56 | 654F208 | Wood Screw Packet<br>***Not Shown*** |

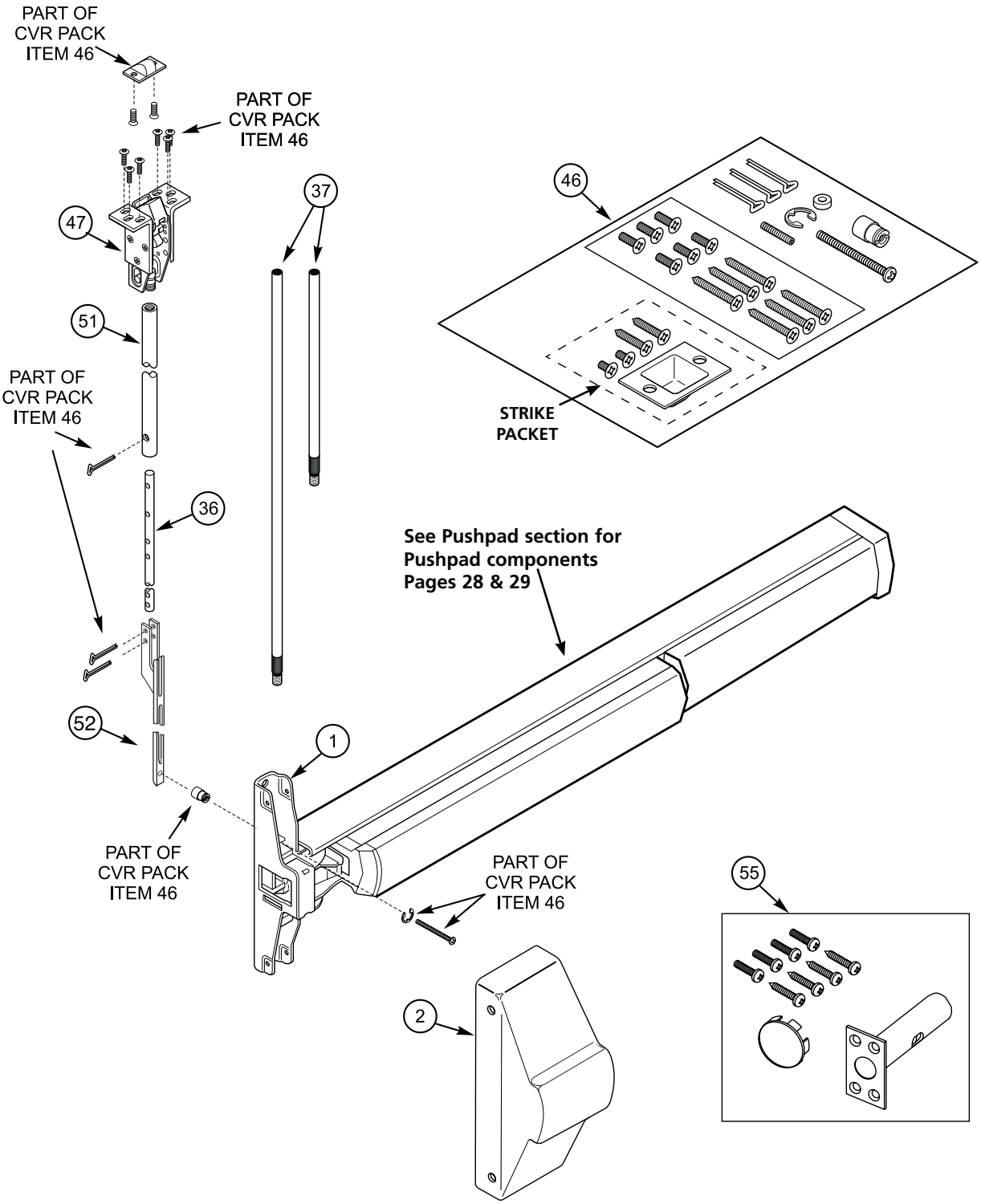
PART OF CVR PACK ITEM 46
PART OF CVR PACK ITEM 46
47
37
46
51
PART OF CVR PACK ITEM 46
STRIKE PACKET
36
See Pushpad section for Pushpad components Pages 28 & 29
52
1
PART OF CVR PACK ITEM 46
PART OF CVR PACK ITEM 46
55
2

| Item | Part No. | Description |
|---|---|---|
| 1 | 706F098 | Active Head ED5602(A) RHR |
| | 706F108 | Active Head ED5602(A) LHR |
| | 650F428 | ED5600(A) |
| 2 | 706F15 | Cover ED5602 RHR |
| | 706F16 | Cover ED5602 LHR |
| | 650F02 x Fin | ED5600 |
| | ***Not Available*** | ED5600A |
| 42 | | Mortise Lock Body Specify Hand |
| | 678F008 x Hand | ED5600T(A) |
| | 650F678 x Hand | ED5657K(A), ED5657T(A), ED5657K(A) |
| | 655F488 x Hand | ED5600K(A) |
| | 655F698 x Hand | ED5600L(A) |
| 43 | 650F06 x Fin | Armored Front |
| 45 | 650L657020622 | Strike Packet |
| 46 | 706F485 | Cylinder Housing ED5602(A) ***Not Shown*** |
| 47 | 706F462 | Mortise Cylinder Adapter ED5602(A) ***Not Shown*** |
| 48 | 429F41 x Fin | Mounting Pack ***Not Shown*** |
| | | Screw, 8-32 x 1/4 UFPHMS (2) |
| | | Screw, #12/12-24 Comb.UFPHMS (2) & Cyl |
| 49 | | Open Back Strike - Optional ***Not Shown*** |
| | 653L163016 622 | Straight Lip 1-3/4 Door |
| | 653L183016 622 | Curved Lip 1-3/4 Door |
| 50 | 654F208 | Wood Screw Packet ***Not Shown*** |

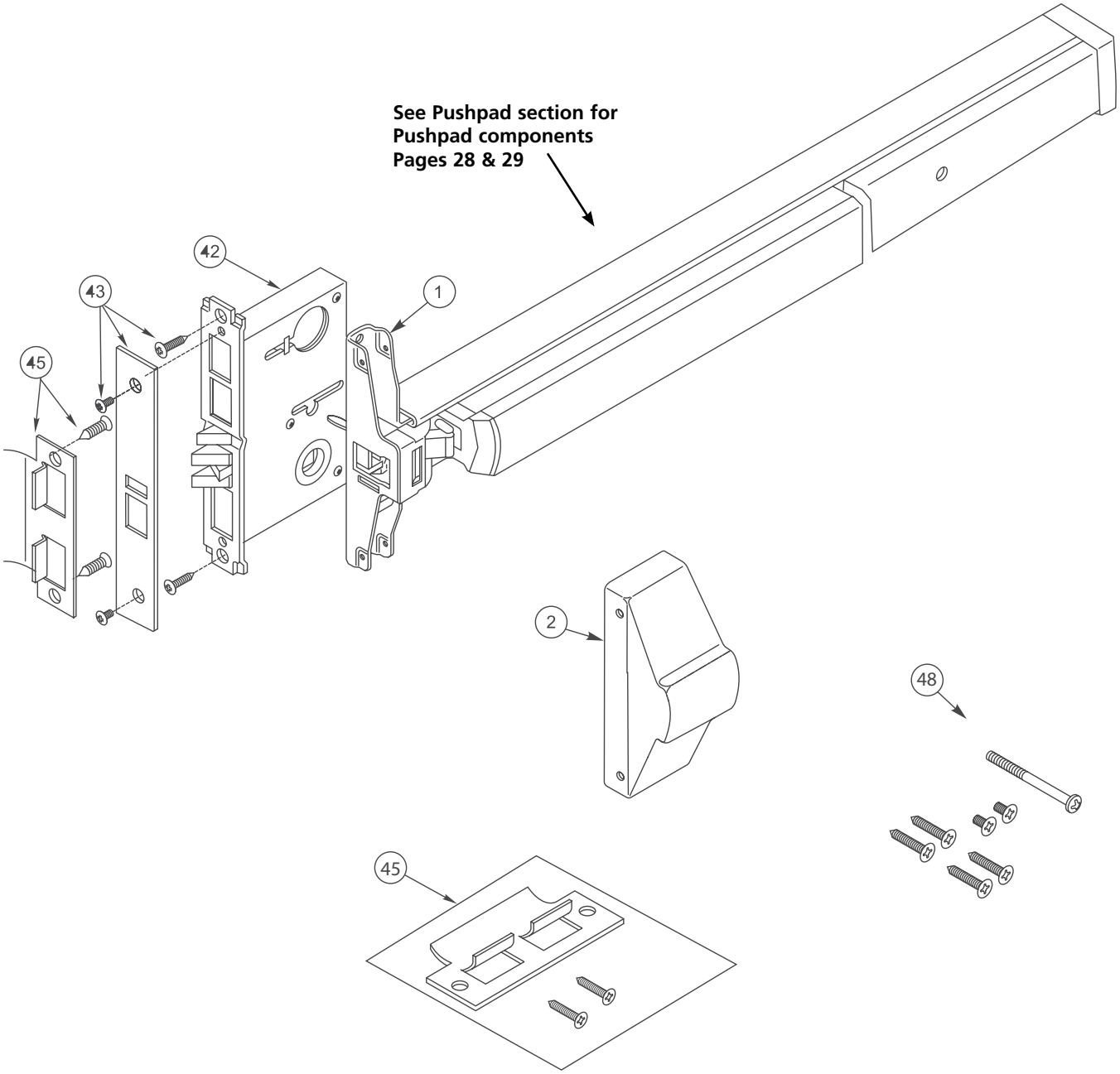
See Pushpad section for
Pushpad components
Pages 28 & 29
42
43
1
45
2
48
45

| Item | Part No. | Description |
|---|---|---|
| 4 | 650F21 x Fin | Bottom Rail, 48" |
| 5 | 650F93 x Fin | Cover |
| 7 | 650F998 | Carrier Bar |
| 11 | 704F642 x Fin | End Cap (2) |
| 21 | 704F648 | Device Mounting Pack (2)<br>***Consists of the following:***<br>End Clamp<br>Screw, 1/4-20 X 1 PPHMS |
| 22 | 704F63 x Fin | Packet, Cover Screw |
| 23 | 654F208 | Wood Screw Packet<br>***Not Shown*** |

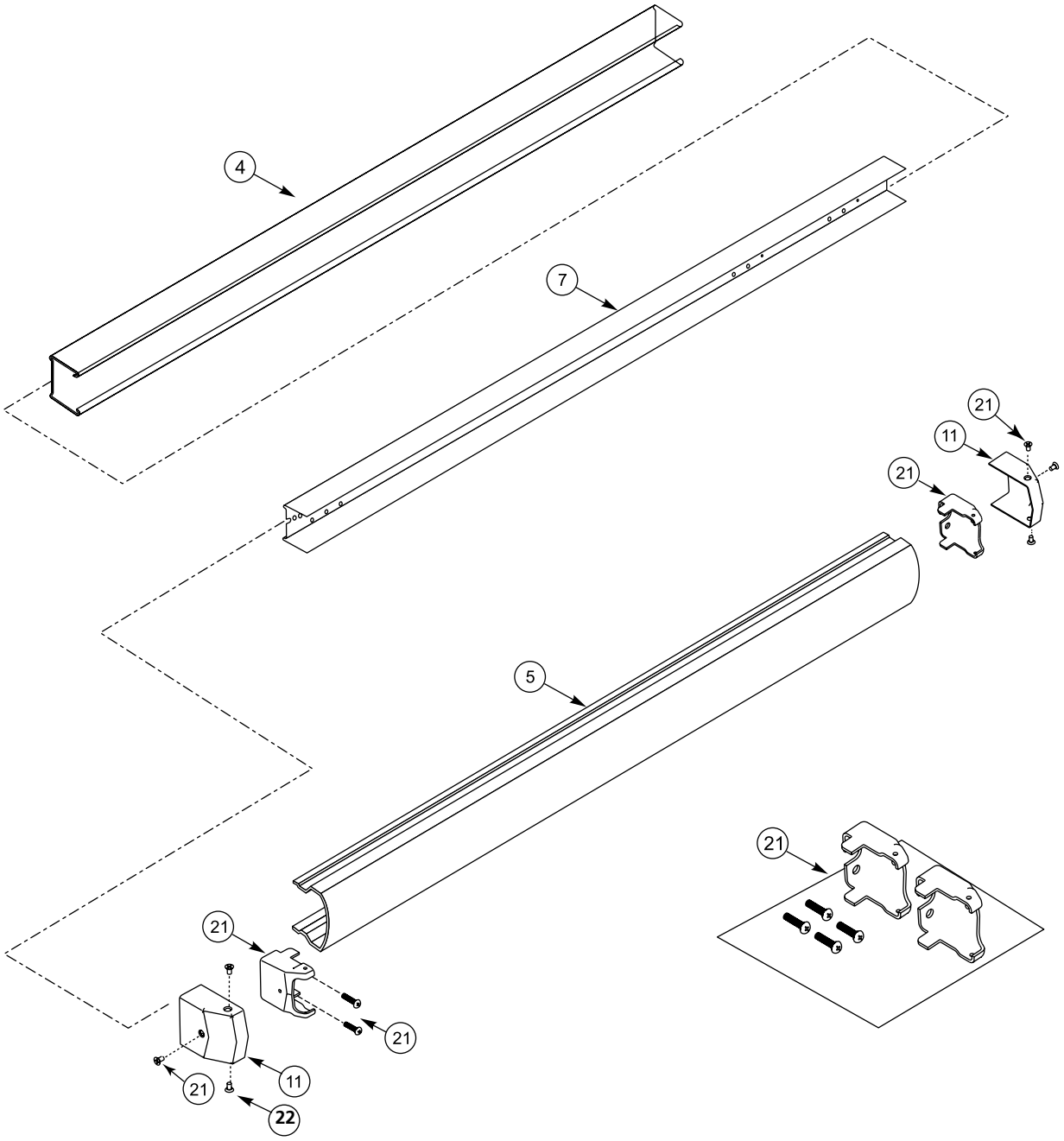
4
7
21
11
21
5
21
21
21
11
21
22

| Item | Part No. | Description |
|---|---|---|
| 1 | See specific devices - | Active Heads |
| 2 | See specific devices - | Active Heads Covers |
| 3 | | Bottom Rail |
| | 691F16 Fin | 24" ED4000 |
| | 656F75 Fin | 24" ED5000 |
| | 650F20 FIn | 36" ED4000 |
| | 650F19 Fin | 36" ED5000 |
| | 650F21 Fin | 48" ED4000, ED5000, ED5000DB |
| 5 | | Bar & Carrier Assembly |
| | 691F148 | 24" ED4000 |
| | 656F768 | 24" ED5000 |
| | 650F238 | 36" ED4000 |
| | 650F228 | 36" ED5000 |
| | 650F248 | 48" ED4000, ED5000 |
| | 650F998 | 48" ED5000DB |
| 6 | | Cover, Bar |
| | 656F72 Fin | 24" ED4000, ED5000 |
| | 650F07 Fin | 36" ED4000, ED5000 |
| | 650F08 Fin | 48" ED4000, ED5000 |
| | 676F29 Fin | 24" ED4000, ED5000 Embossed (M22) |
| | 656F69 Fin | 36" ED4000, ED5000 Embossed (M22) |
| | 656F70 Fin | 48" ED4000, ED5000 Embossed (M22) |
| | 710F797 | 24" ED4000, ED5000 Photoluminescent (M49) |
| | 710F737 | 36" ED4000, ED5000 Photoluminescent (M49) |
| | 710F747 | 48" ED4000, ED5000 Photoluminescent (M49) |
| 7 | | Cover, End |
| | 691F15 Fin | 24" ED4000 Hexkey Dogging |
| | 691F17 Fin | 24" ED4000 Cylinder Dogging |
| | 656F73 Fin | 24" ED5000 Hexkey Dogging |
| | 656F74 Fin | 24" ED5000 Cylinder Dogging |
| | 650F13 Fin | 36" ED4000 Hexkey Dogging |
| | 650F14 Fin | 36" ED4000 Cylinder Dogging |
| | 650F11 Fin | 36" ED5000 Hexkey Dogging |
| | 650F12 Fin | 36" ED5000 Cylinder Dogging |
| | 650F15 Fin | 48" ED4000, ED5000 Hexkey Dogging |
| | 650F16 Fin | 48" ED4000, ED5000 Cylinder Dogging |
| | 650F93 Fin | 48" ED5000DB |
| 8 | 711F685 622 | Touch Pad Cap, Front |
| 9 | 710F495 622 | Touch Pad Cap, Rear |
| 10 | 650F189 | Bar Cap, Black Nylon |
| 11 | 704F62 Fin | End Cap |
| 12 | | Trim Slide |
| | 650F489 | All Except Mortise |
| | N/A | Mortise Trim Slide (attached to Active Head) |
| 13 | | Trim Slide Retainer |
| | 650F489 | All Except Mortise |
| | 694F848 | Mortise Trim Slide Retainer |

| Item | Part No. | Description |
|---|---|---|
| 14 | | Dogging Assembly |
| | 650F528 | HexKey (Standard) |
| | 650F968 | Cylinder Dogging |
| 15 | 656F408 | Dogging Key (5/32" Hex) |
| 16 | 650F279 | Dogging Hole Plug |
| 17 | 697F862 | Cylinder Nut |
| 18 | 650F959 | Cylinder Spacer |
| 19 | | Collar, Dogging Cylinder |
| | None Required | 1 1/8" Cylinder |
| | 270F15 x Fin | 1-1/4" Cylinder |
| | 610F02 x Fin | 1-3/8" Cylinder |
| | 654F07 x Fin | 1-1/2" Cylinder |
| 20 | | Cylinder Dogging Cylinder |
| | As Ordered | Mortise Cylinder x A02 Cam |
| 21 | | End Clamp Packet |
| | 704F648 | All except SecureBolt |
| | 704F658 | SecureBolt Devices |
| 22 | 650F288 622 | Screw, Pushpad Caps (4) |
| 23 | 704F63 Fin | Screw Pack, Ecn Cap & Active Head Cover |
| | | #8-32 x 5/8" PHT-PH |
| 24 | 711F608 | Screw Dogging Assembly (2) |
| | | #10-32 x 1/2" PHT-PH (1) |
| 25 | 650F508 | Screw, Trim Slide |
| | | #8-32 x 1/2" FHT-PH (1) |
| 26 | 650F518 | Screw, Active Head to Carrier |
| | | #8-32 x 1/4" PHT-C-PH (2) |
| 28 | 650F298 Fin | Sex Nut Packet (4-SNB's) ED5200(A) S |
| | 681F698 Fin | SecureBolt (6SNB's) ED5200SA |
| 56 | 704F888 | High Impact End Clamp (M109) Optional |

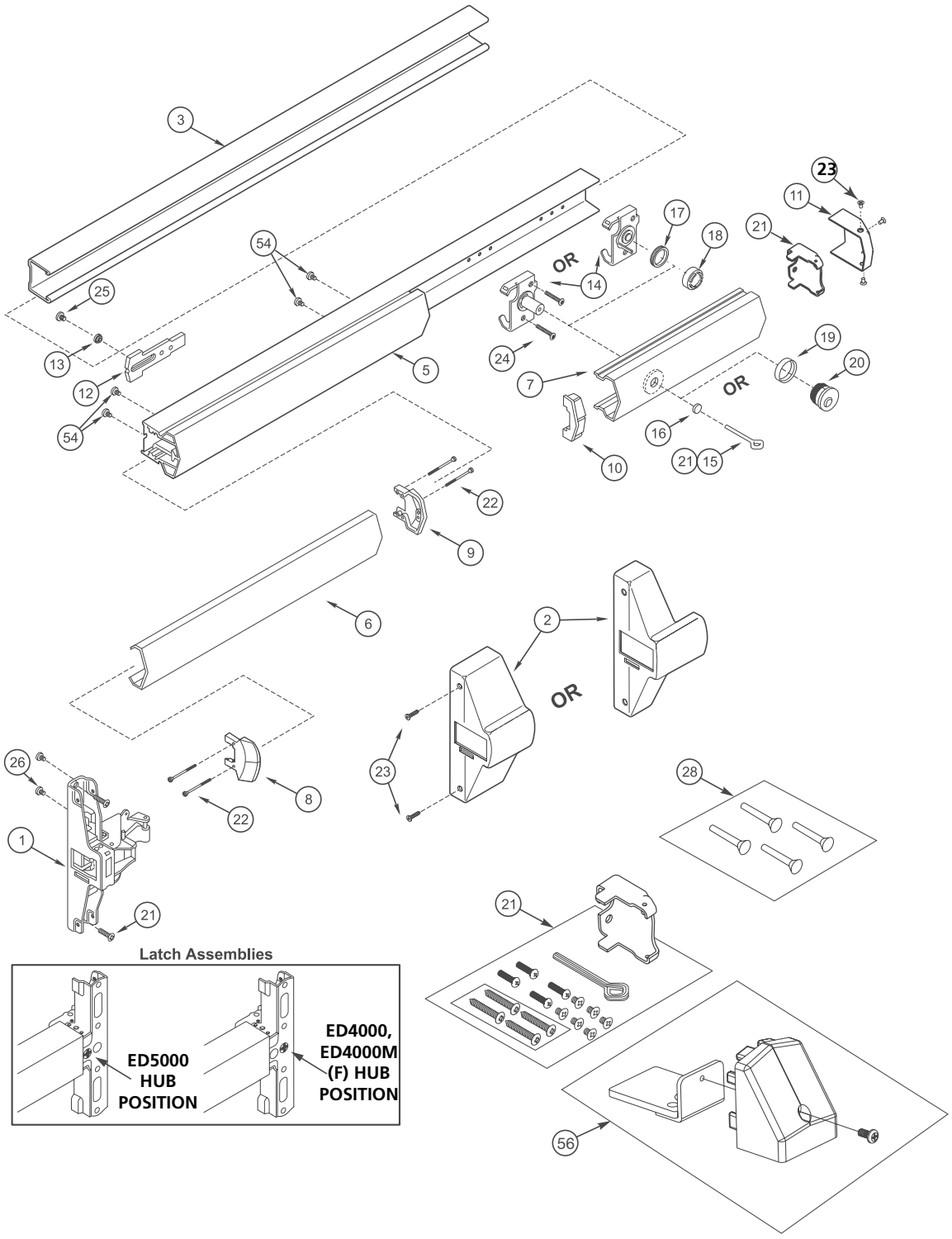
3
54
25
13
12
54
5
23
11
21
17
18
OR
14
24
7
19
20
OR
16
21
15
10
22
9
6
2
OR
23
26
1
21
22
8
28
21
56
Latch Assemblies
ED5000
HUB
POSITION
ED4000,
ED4000M
(F) HUB
POSITION

| Item | Part No. | Description |
|---|---|---|
| 1 | | Escutcheon Assembly |
| | | (All other knobs/levers) |
| | 783F055 x Fin | *910 |
| | 733F44 x Fin | *910, *950 |
| | 783F06 x Fin | *955, *959 |
| | | Escutcheon Assembly |
| | | (Muséo Levers) |
| | 733F48 x Fin | *910 |
| | 733F53 x Fin | *950 |
| | 733F50 x Fin | *955, *959 |
| 2 | | Lever and Spindle (non-Muséo) |
| | 677F04 X Fin | Lustra |
| | 677F05 X Fin | Newport |
| | 677F13 X Fin | Essex |
| | 677F14 X Fin | Regis |
| | 677F15 X Fin | Citation |
| | 677F16 X Fin | Armstrong |
| | 677F26 X Fin | Dirke RHR |
| | 677F27 X Fin | Dirke LHR |
| | 677F28 X Fin | Princeton |
| | 698F31 X Fin | Tuscany |
| | 698F32 X Fin | Merlot |
| | 698F64 X Fin | Frascati RHR |
| | 698F66 X Fin | Frascati LHR |
| | 698F68 X Fin | Zinfandel RHR |
| | 698F70 X Fin | Zinfandel LHR |
| | | Knob & Spindle SA |
| | 656F45 X Fin | Global |
| | ***See Page 62*** | Muséo Levers |
| 3 | ***See Pages 63-64*** | Rim Cylinder |
| 5 | 651F675 | Cylinder Housing (*955, *959) |
| 6 | 655F028 | Screw Cylinder Mounting (2) |
| 7 | Included with Cylinder Housing | Function Selector Screw (*955, *959) |
| 9 | 651F508 | Screw, Tailpiece Plate (2) |

| Item | Part No. | Description |
|---|---|---|
| 10 | | Tailpiece Assembly |
| | 677F068 | 1 3/4" Door w/o Shim Kit |
| | 655F708 | 2 -21/4" Door or Std. Door w/Shim Kit |
| | 701F648 | 2 1/2"-3 1/2" Door |
| | 701F658 | 3 1/2"-4 1/2" |
| 11 | | Gear, Drive |
| | 651F648 | Lever |
| | 677F258 | Knob |
| 12 | 677F085 | Hub, Spring Retaining |
| 14 | 677F098 | Cotter Pin |
| 15 | 677F078 | Nut, Spindle |
| 16 | | Bushing, Nylon |
| | 677F029 | Lever (All except Muséo) |
| | 651F389 | Knob |
| | 806F069 | Lever - Muséo |
| 17 | | Screw Pkt., Mtg. |
| | 652F128 x Fin | 1 3/4"-2" Doors |
| | 652F138 x Fin | 2"-2 1/4" Doors |
| 18 | | Torsion Springs ***Not Shown*** |
| | 651F618 | Lever, LHR (Red) |
| | 651F628 | Lever RHR (Blue) |
| | 651F758 | Knob |
| 19 | 651F408 | Compression Spring (Under tailpiece) |
| 21 | 651F708 | Bushing, Spacer |
| 27 | 651F768 | Groove Pin (Knob Only) |

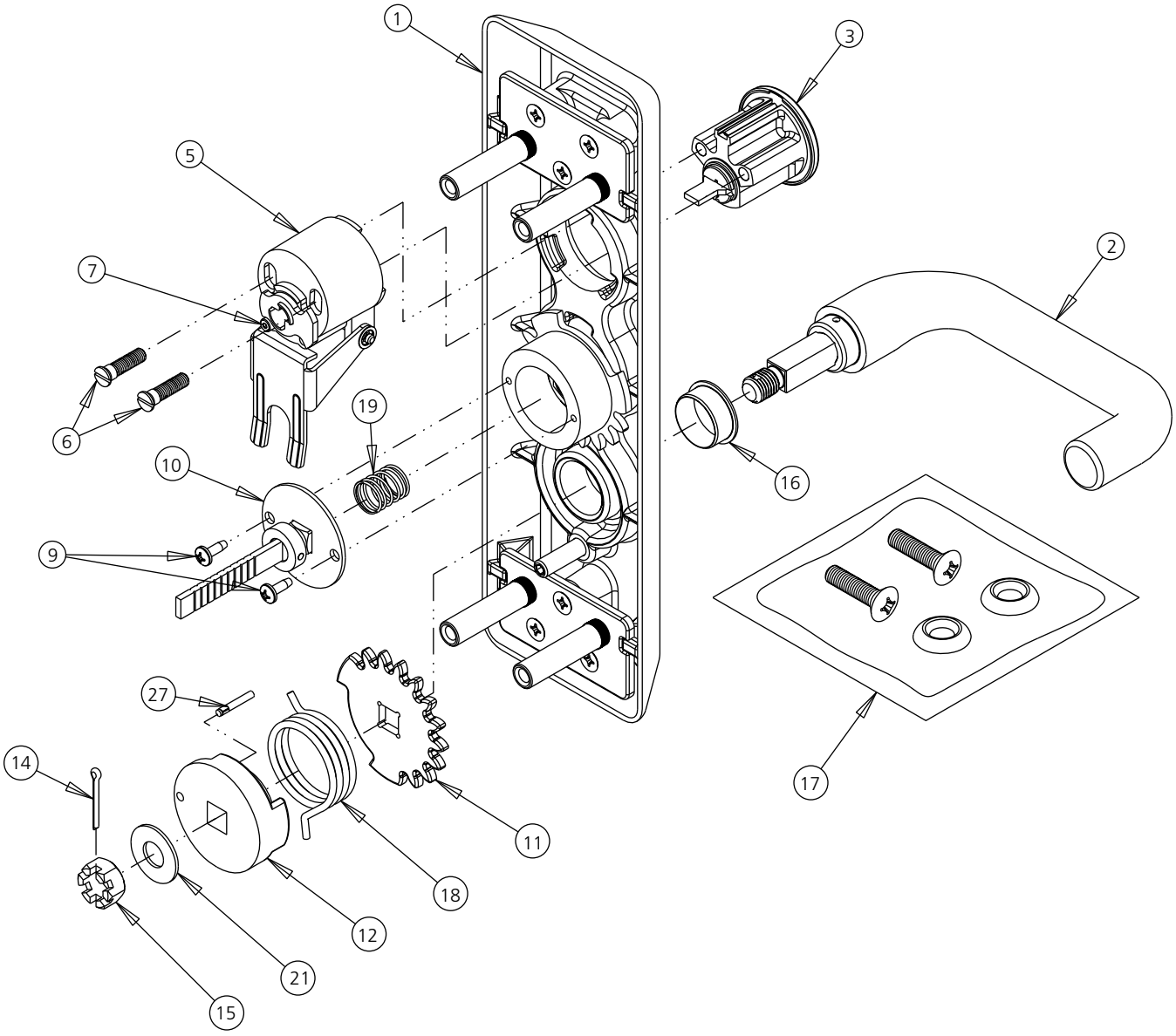
1
3
5
2
7
6
19
16
10
9
27
14
11
18
12
21
15
17

| Item | Part No. | Description |
|---|---|---|
| | | Escutcheon Assy. 623F, 627F |
| 1 | 733F47 x Fin | Standard |
| | 733F52 x Fin | Muséo |
| | | Lever and Spindle (non-Muséo) |
| | 677F04 X Fin | Lustra |
| | 677F05 X Fin | Newport |
| | 677F13 X Fin | Essex |
| | 677F14 X Fin | Regis |
| | 677F15 X Fin | Citation |
| | 677F16 X Fin | Armstrong |
| | 677F26 X Fin | Dirke RHR |
| | 677F27 X Fin | Dirke LHR |
| 2 | 677F28 X Fin | Princeton |
| | 698F31 X Fin | Tuscany |
| | 698F32 X Fin | Merlot |
| | 698F64 X Fin | Frascati RHR |
| | 698F66 X Fin | Frascati LHR |
| | 698F68 X Fin | Zinfandel RHR |
| | 698F70 X Fin | Zinfandel LHR |
| | | Knob & Spindle SA |
| | 656F45 X Fin | Global |
| | ***See Page 62*** | Muséo Levers |

| | | |
|---|---|---|
| 3 | ***See Pages 63-64*** | Cylinder, Rim |
| 5 | 651F425 | Housing, Cylinder |
| 6 | 655F028 | Screw, Cylinder Mounting (2) |
| 11 | 651F648 | Gear, Drive |
| 12 | 677F085 | Spring Retainer Hub |
| 14 | 677F098 | Cotter Pin |
| 15 | 677F078 | Nut, Spindle |
| 16 | 677F029 | Bushing Lever |
| | | Screw Packet, Mtg. |
| 17 | 652F128 x Fin | 1-3/4" - 2" Doors |
| | 652F138 x Fin | 2-1/4" Doors |
| | | Spring, Grip Return |
| | 651F758 | Knob |
| 18 | 651F628 | Lever Return Spring RHR |
| | 651F618 | Lever Return Spring LHR |
| 27 | 651F768 | Groove Pin (Knob Only) |

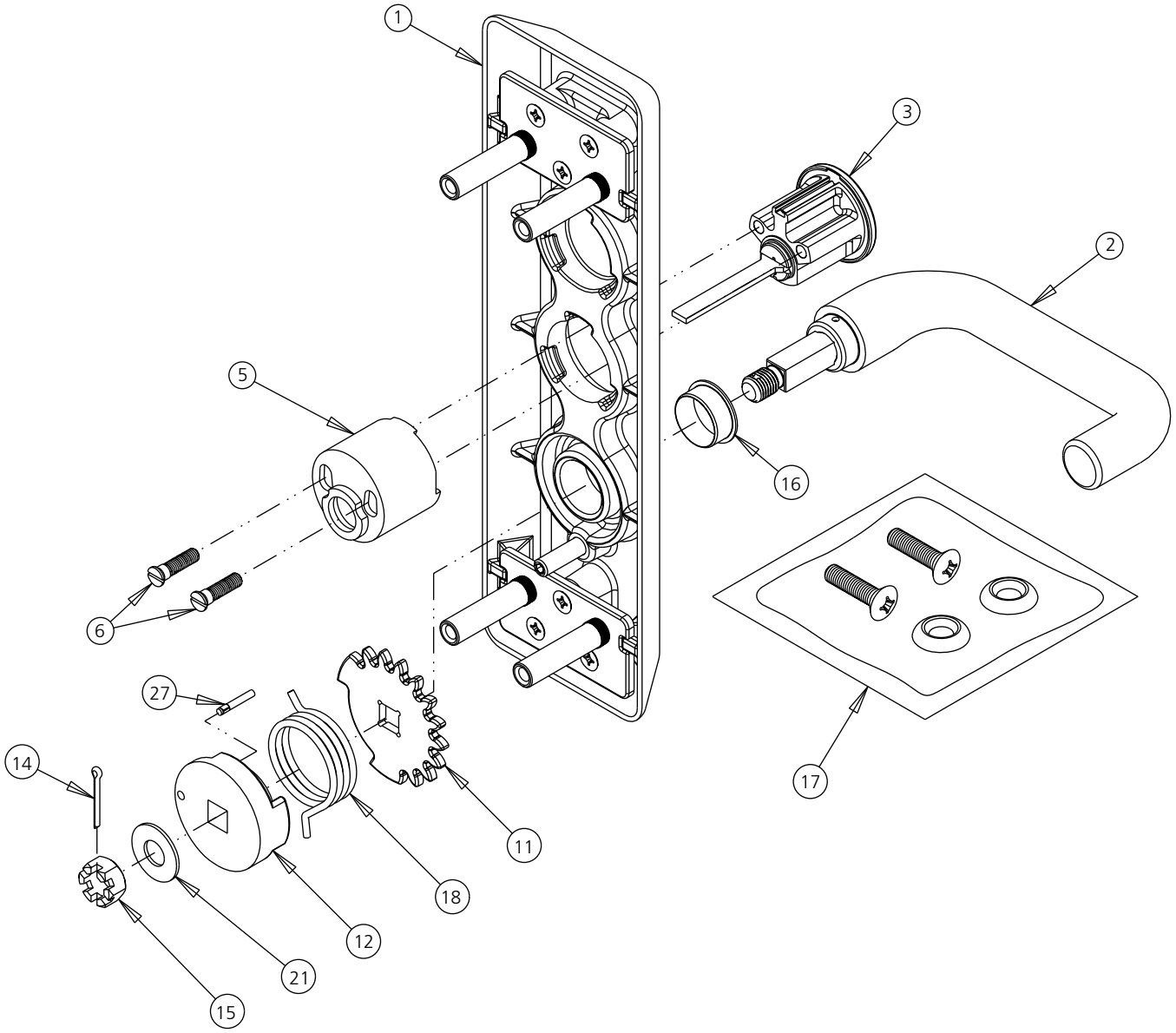
1
3
2
5
16
6
27
14
11
18
12
21
15
17

| Item | Part No. | Description |
|---|---|---|
| 1 | | Escutcheon Assembly |
| | 733F45 x Fin | Cylinder x Lever or Knob |
| | 733F43 x Fin | Blank x Lever or Knob |
| | | Escutcheon Assembly Muséo |
| | 733F51 x Fin | Lever & Cylinder Hole |
| | 733F49 x Fin | Lever Hole Only |
| 2 | 653F50 x Fin | Essex |
| | 653F53 x Fin | Lustra |
| | 653F56 x Fin | Regis |
| | 653F59 x Fin | Citation |
| | 653F62 x Fin | Dirke RHR |
| | 653F65 x Fin | Dirke LHR |
| | 653F68 x Fin | Newport |
| | 653F71 x Fin | Armstrong |
| | 653F74 x Fin | Princeton |
| | 698F32 x Fin | Tuscany |
| | 698F34 x Fin | Merlot |
| | 698F65 x Fin | Frascati RHR |
| | 698F67 x Fin | Frascati LHR |
| | 698F69 x Fin | Zinfandel RHR |
| | 698F71 x Fin | Zinfandel LHR |
| | ***See Page 62*** | Muséo Levers |

| Item | Part No. | Description |
|---|---|---|
| 3 | ***See Pages 63-64*** | Cylinder, Mortise* |
| 11 | 651F648 | Gear |
| 14 | 677F098 | Cotter Pin |
| 15 | 698F088 | Nut, Spindle |
| 16 | | Thimble Insert, Nylon |
| | 677F029 | Levers |
| | 651F389 | Knob |
| | 806F069 | Muséo |
| 17 | | Screw Packet, Mtg. |
| | 652F128 x Fin | 1-3/4" - 2" Doors |
| | 652F138 x Fin | 2-1/4" Doors |
| | | ***Consists of the following:*** |
| | | Screw, 1/4-20 x 1 OPHMS (2) |
| | | Washer, #14 Finish (2) |
| 25 | | Spindle |
| | 698F108 | 1-3/4" - 2-1/4" |

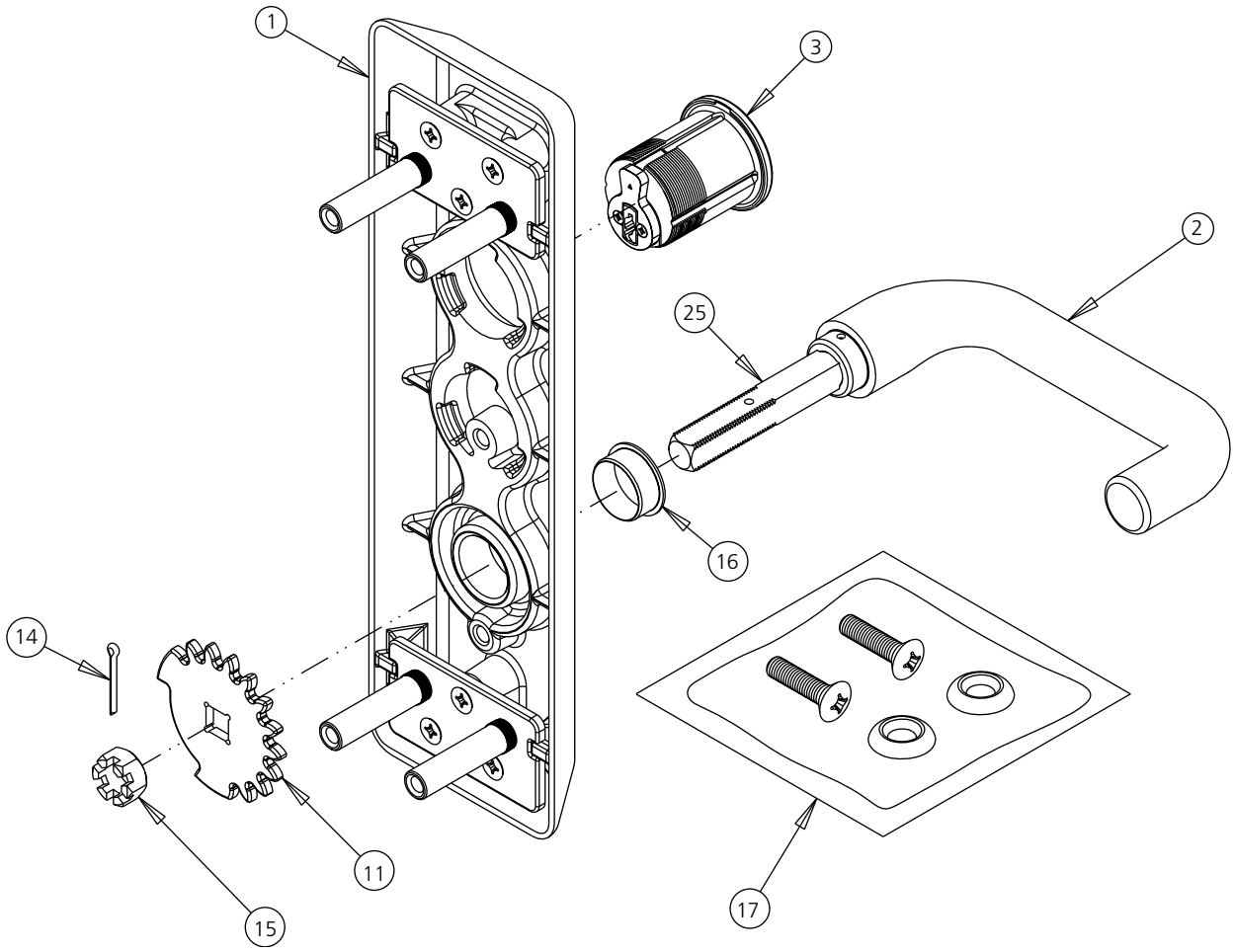
1
3
2
25
16
14
11
15
17

| Item | Part No. | Description |
|---|---|---|
| 1 | | Escutcheon Assembly |
| | 733F41 x Fin | F950 |
| | 733F42 x Fin | F957 |
| | 733F46 x Fin | F9M57 |
| 3 | ***See Pages 63-64*** | Cylinder, Rim or Mortise |
| 5 | 651F425 | Housing, Cylinder F957 |
| 6 | 655F028 | Screw, Cylinder F957 Mounting (2) |
| 17 | | Screw Packet, Mtg. |
| | 651F128 x Fin | 1-3/4"- 2" DOor |
| | 651F138 x Fin | 2-1/4" Door |
| | | ***Consists of the following:*** |
| | | Screw, 1/4-20 x 1 OPHMS (2) |
| | | Washer, #14 Finish (2) |

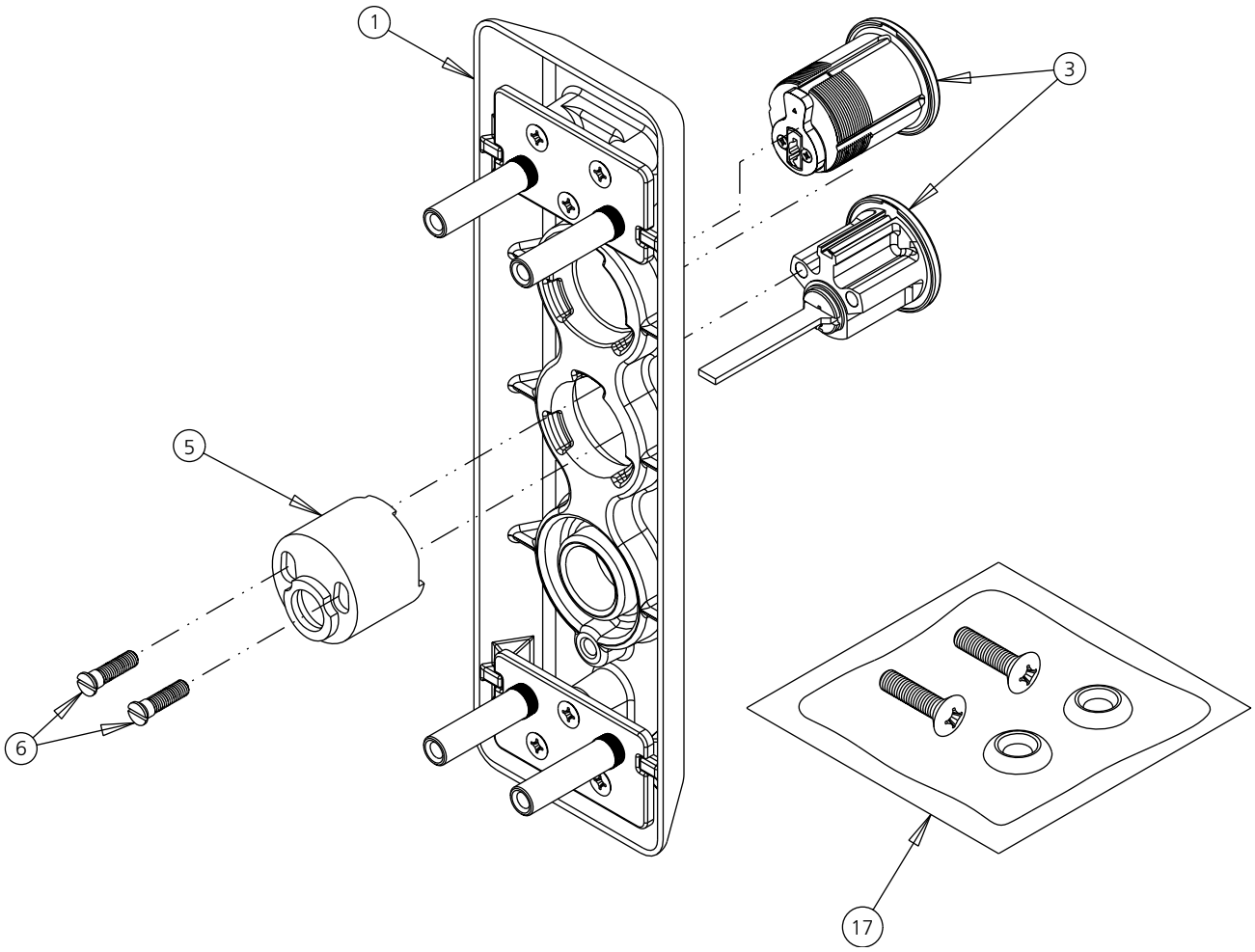


|  |  |  |
|---|---|---|
| **(EO) Blank Plate** | **(NL) Access by Key** | **(NL) Access by Key** |
| 01 | 03 | 07 |
| F950 | F957 | F9M57 |

| Item | Part No. | Description |
|---|---|---|
| 1 | | Parabolic Escutcheon |
| | | (All other knobs/levers) |
| | 708F26 x Fin | *910, *950 |
| | 708F23 x Fin | *955, *959 |
| | | Parabolic Escutcheon |
| | | (Muséo Levers) |
| | 806F03 x Fin | *910, *950 |
| | 806F04 x Fin | *955, *959 |
| 2 | | Lever and Spindle (non-Muséo) |
| | 677F04 X Fin | Lustra |
| | 677F05 X Fin | Newport |
| | 677F13 X Fin | Essex |
| | 677F14 X Fin | Regis |
| | 677F15 X Fin | Citation |
| | 677F16 X Fin | Armstrong |
| | 677F26 X Fin | Dirke RHR |
| | 677F27 X Fin | Dirke LHR |
| | 677F28 X Fin | Princeton |
| | 698F31 X Fin | Tuscany |
| | 698F32 X Fin | Merlot |
| | 698F64 X Fin | Frascati RHR |
| | 698F66 X Fin | Frascati LHR |
| | 698F68 X Fin | Zinfandel RHR |
| | 698F70 X Fin | Zinfandel LHR |
| | | Knob & Spindle SA |
| | 656F45 X Fin | Global |
| | ***See Page 62*** | Muséo Levers |
| 3 | ***See Pages 63-64*** | Rim Cylinder |
| 5 | 651F675 | Cylinder Housing (*955, *959) |
| 6 | 655F028 | Screw Cylinder Mounting (2) |
| 7 | Included with Cylinder Housing | Function Selector Screw (*955, *959) |
| 9 | 651F508 | Screw, Tailpiece Plate (2) |

| Item | Part No. | Description |
|---|---|---|
| 10 | | Tailpiece Assembly |
| | 677F068 | 1 3/4" Door w/o Shim Kit |
| | 655F708 | 2 -21/4" Door or Std. Door w/Shim Kit |
| | 701F648 | 2 1/2"-3 1/2" Door |
| | 701F658 | 3 1/2"-4 1/2" |
| 11 | | Gear, Drive |
| | 651F648 | Lever |
| | 677F258 | Knob |
| 12 | 677F085 | Hub, Spring Retaining |
| 14 | 677F098 | Cotter Pin |
| 15 | 677F078 | Nut, Spindle |
| 16 | | Bushing, Nylon |
| | 677F029 | Lever (All except Muséo) |
| | 651F389 | Knob |
| | 806F069 | Lever - Muséo |
| 17 | | Screw Pkt., Mtg. |
| | 652F128 x Fin | 1 3/4"-2" Doors |
| | 652F138 x Fin | 2"-2 1/4" Doors |
| 18 | | Torsion Springs |
| | 651F618 | Lever, LHR (Red) |
| | 651F628 | Lever RHR (Blue) |
| | 651F758 | Knob |
| 19 | 651F408 | Compression Spring (Under tailpiece) |
| 20 | 651F398 | Hex Nut Bushing for Spring |
| 21 | 651F708 | Bushing, Spacer |
| 22 | 783F048 | Threaded Post (4) |
| 24 | 677F128 | Set Screw (1) 1/4"-20 x 1" |
| 26 | 677F118 | Set Screw (10 1/4"-20 x 5/8" (hex nut bushing) |
| 27 | 651F768 | Groove Pin (Knob Only) |

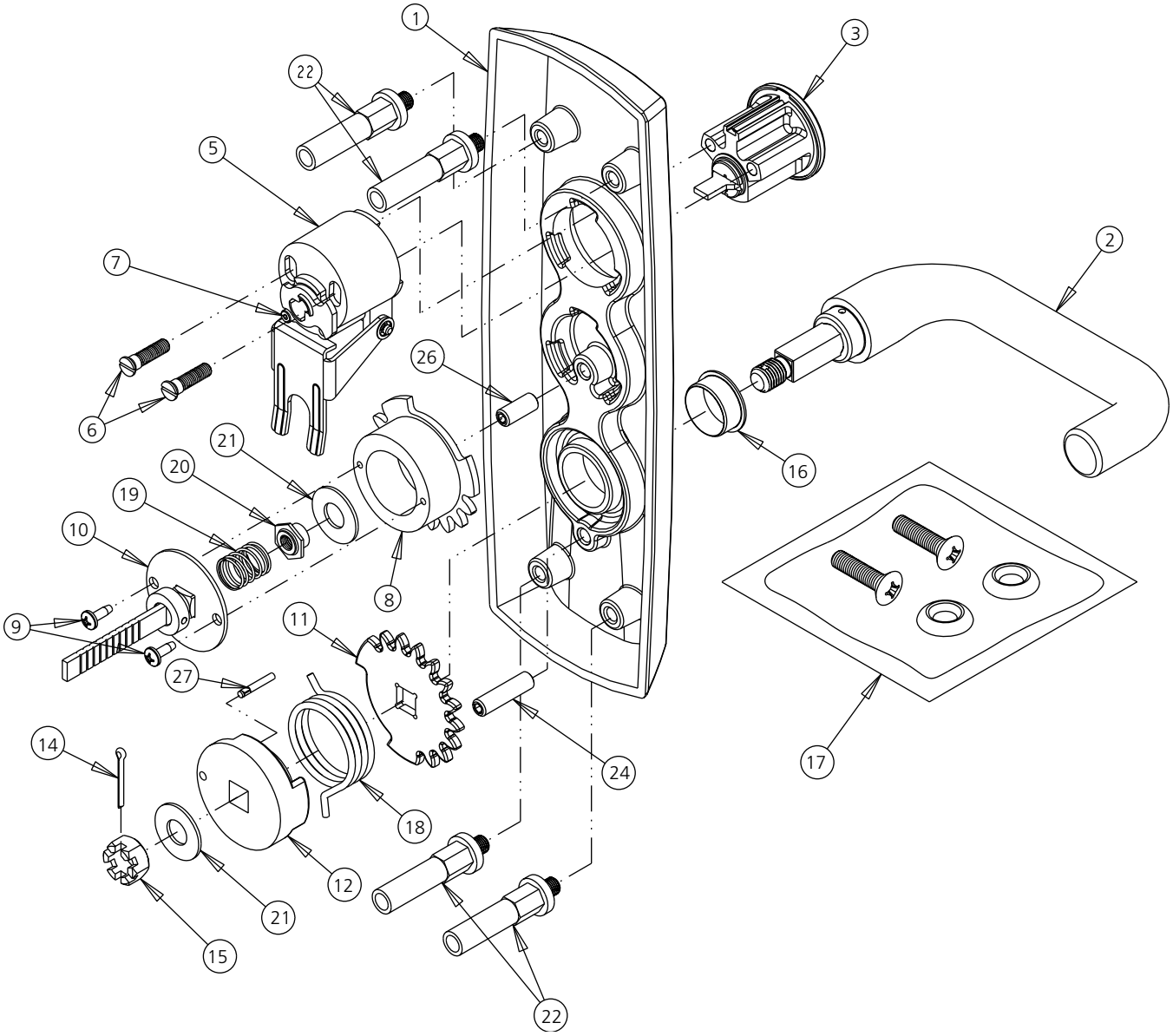
1
3
22
5
2
7
26
6
21
20
16
19
10
8
9
11
27
24
14
17
18
12
21
15
22

| Item | Part No. | Description |
|---|---|---|
| 1 | 708F25 x Fin | Standard Parabolic Escutcheon |
| | 806F05 x Fin | Muséo Parabolic Escutcheon |
| 2 | | Lever and Spindle (non-Muséo) |
| | 677F04 X Fin | Lustra |
| | 677F05 X Fin | Newport |
| | 677F13 X Fin | Essex |
| | 677F14 X Fin | Regis |
| | 677F15 X Fin | Citation |
| | 677F16 X Fin | Armstrong |
| | 677F26 X Fin | Dirke RHR |
| | 677F27 X Fin | Dirke LHR |
| | 677F28 X Fin | Princeton |
| | 698F31 X Fin | Tuscany |
| | 698F32 X Fin | Merlot |
| | 698F64 X Fin | Frascati RHR |
| | 698F66 X Fin | Frascati LHR |
| | 698F68 X Fin | Zinfandel RHR |
| | 698F70 X Fin | Zinfandel LHR |
| | | Knob & Spindle SA |
| | 656F45 X Fin | Global |
| | ***See Page 62*** | Muséo Levers |
| 3 | ***See Pages 63-64*** | Cylinder, Rim |
| 5 | 651F425 | Housing, Cylinder |
| 6 | 655F028 | Screw, Cylinder Mounting (2) |
| 11 | 651F648 | Gear, Drive |
| 12 | 677F085 | Spring Retainer Hub |
| 14 | 677F098 | Cotter Pin |
| 15 | 677F078 | Nut, Spindle |
| 16 | 677F029 | Bushing Lever |
| 17 | | Screw Packet, Mtg. |
| | 652F128 x Fin | 1-3/4" - 2" Doors |
| | 652F138 x Fin | 2-1/4" Doors |
| 18 | | Spring, Grip Return |
| | 651F758 | Knob |
| | 651F628 | Lever Return Spring RHR |
| | 651F618 | Lever Return Spring LHR |
| 22 | 783F048 | Threaded Post (4) |
| 24 | 677F128 | Set screw (1) 1/4"-2Dx1" |
| 27 | 651F768 | Groove Pin (Knob Only) ***Not Shown*** |

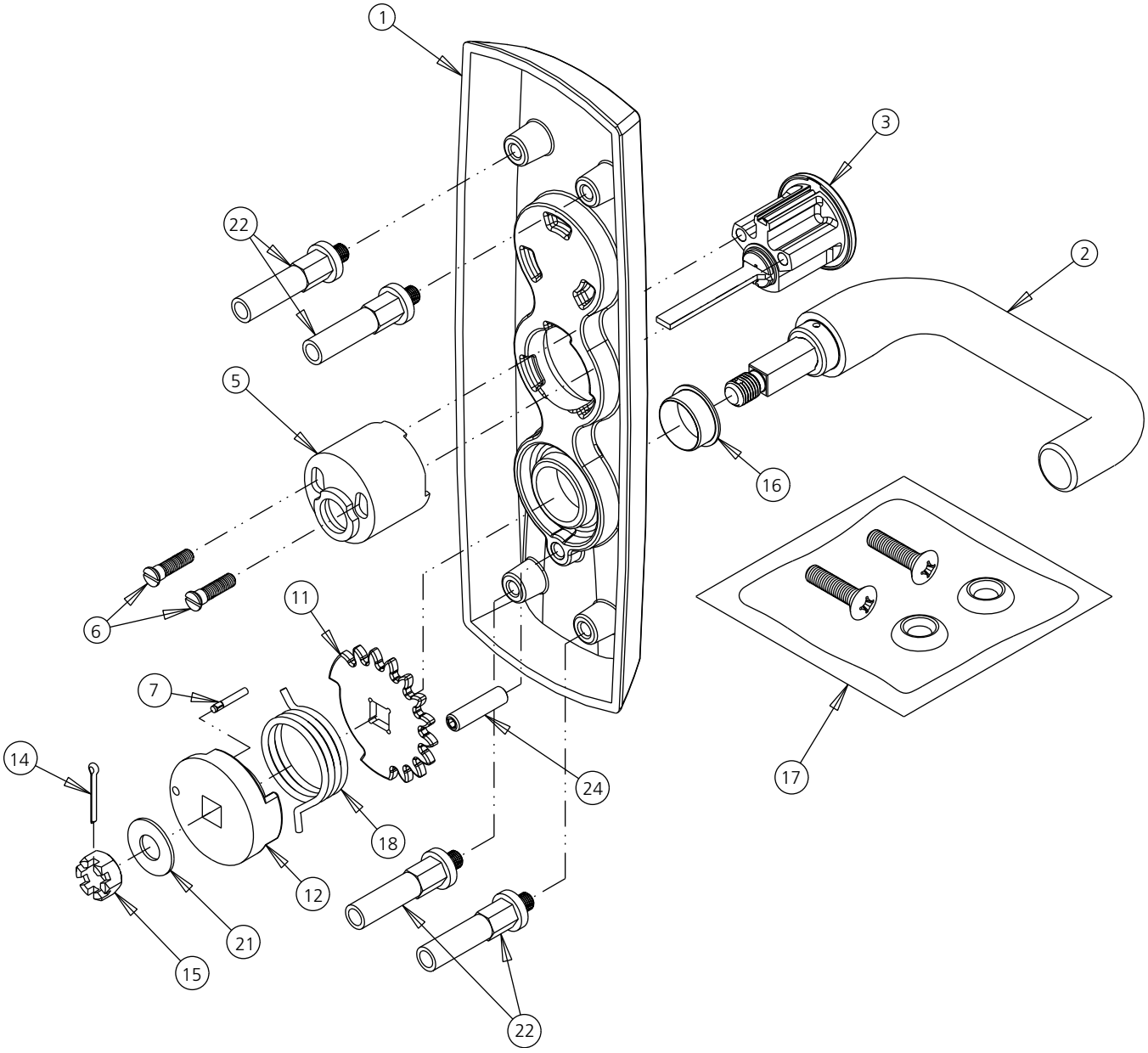
1
3
22
2
5
16
6
11
7
24
14
18
12
21
15
22
17

| Item | Part No. | Description |
|---|---|---|
| 1 | | Parabolic Escutcheon Assembly |
| | 708F23 x Fin | Cylinder x Lever |
| | 708F26 x Fin | Blank x Lever |
| | | Parabolic Escutcheon Muséo |
| | 806F04 x Fin | Lever & Cylinder Hole |
| | 806F03 x Fin | Lever Hole Only |
| 2 | 653F50 x Fin | Essex |
| | 653F53 x Fin | Lustra |
| | 653F56 x Fin | Regis |
| | 653F59 x Fin | Citation |
| | 653F62 x Fin | Dirke RHR |
| | 653F65 x Fin | Dirke LHR |
| | 653F68 x Fin | Newport |
| | 653F71 x Fin | Armstrong |
| | 653F74 x Fin | Princeton |
| | 698F32 x Fin | Tuscany |
| | 698F34 x Fin | Merlot |
| | 698F65 x Fin | Frascati RHR |
| | 698F67 x Fin | Frascati LHR |
| | 698F69 x Fin | Zinfandel RHR |
| | 698F71 x Fin | Zinfandel LHR |
| | ***See Page 62*** | Muséo Levers |

| Item | Part No. | Description |
|---|---|---|
| 3 | ***See Pages 63-64*** | Cylinder, Mortise |
| 11 | 651F648 | Gear |
| 14 | 677F098 | Cotter Pin |
| 15 | 698F088 | Nut, Spindle |
| 16 | | Thimble Insert, Nylon |
| | 677F029 | Levers |
| | 651F389 | Knob |
| | 806F069 | Muséo |
| 17 | | Screw Packet, Mtg. |
| | 652F128 x Fin | 1-3/4" - 2" Doors |
| | 652F138 x Fin | 2-1/4" Doors |
| | | ***Consists of the following:*** |
| | | Screw, 1/4-20 x 1 OPHMS (2) |
| | | Washer, #14 Finish (2) |
| 22 | 783F048 | Threaded Post (4) |
| 25 | | Spindle |
| | 698F108 | 1-3/4" - 2-1/4" |

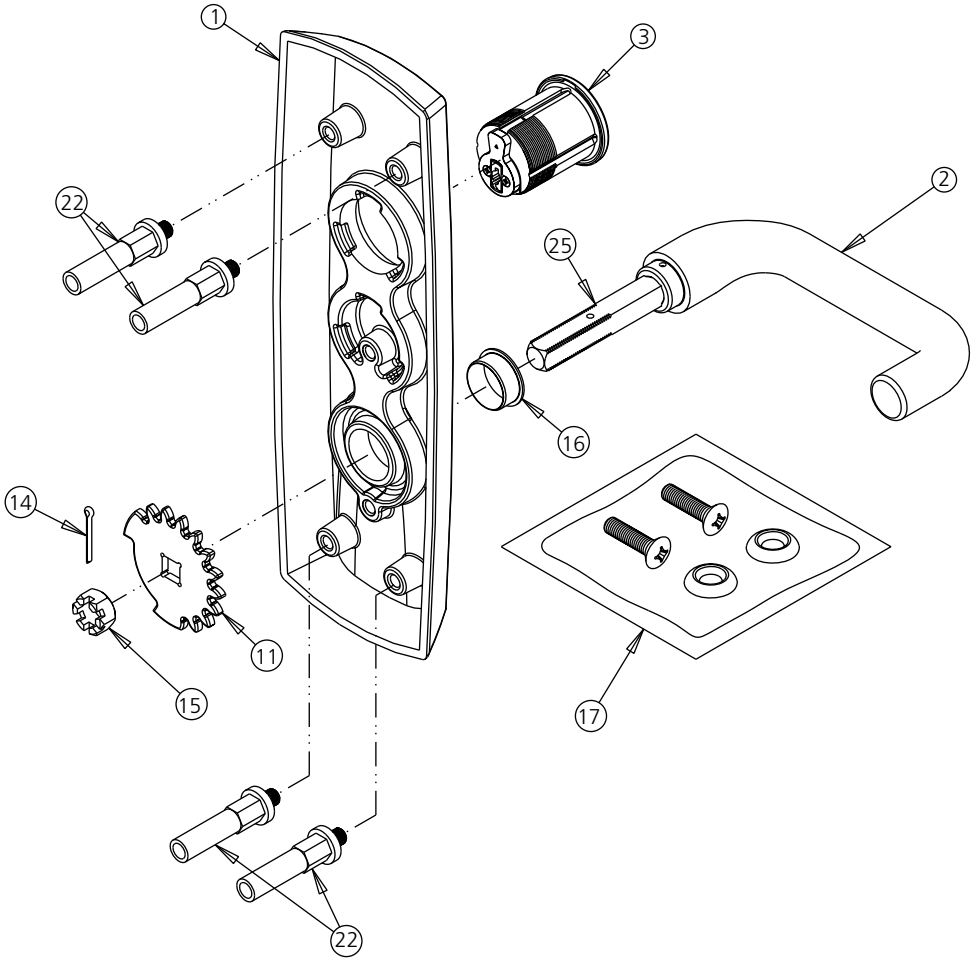
1
3
22
2
25
16
14
11
15
17
22

| Item | Part No. | Description |
|---|---|---|
| 1 | <br>708F20 x Fin<br>708F24 x Fin<br>708F22 x Fin | Parabolic Escutcheon<br>F950<br>F957<br>F9M57 |
| 3 | ***See Pages 63-64*** | Cylinder, Rim or Mortise |
| 5 | 651F425 | Housing, Cylinder F957 |
| 6 | 655F028 | Screw, Cylinder F957 Mounting (2) |
| 17 | <br>651F128 x Fin<br>651F138 x Fin | Screw Packet, Mtg.<br>1-3/4"- 2" DOor<br>2-1/4" Door<br>***Consists of the following:***<br>Screw, 1/4-20 x 1 OPHMS (2)<br>Washer, #14 Finish (2) |
| 22 | 783F048 | Threaded Post (4) |

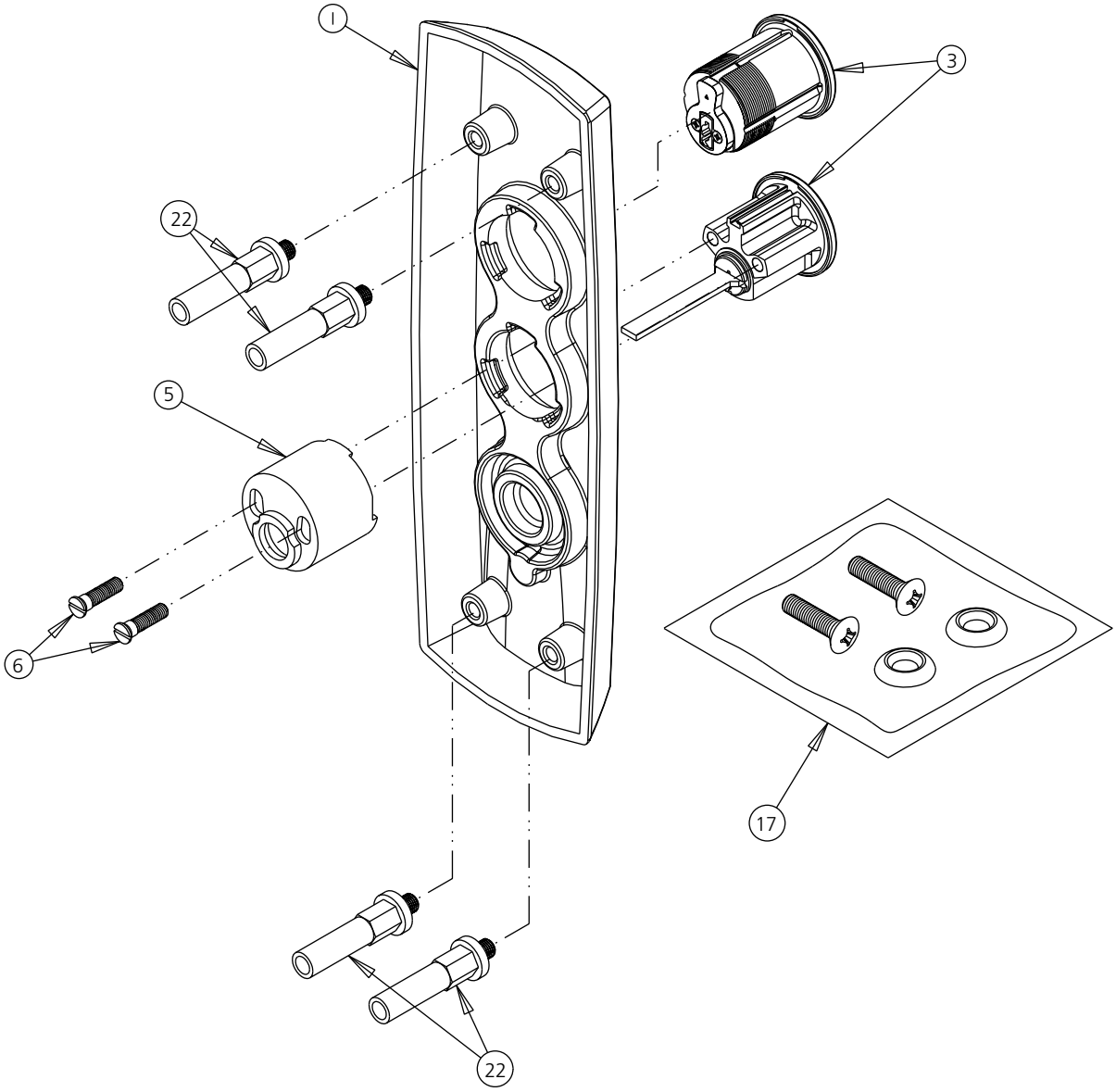


|  |  | 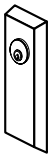 |
|---|---|---|
| **(EO) Blank Plate** | **(NL) Access by Key** | **(NL) Access by Key** |
| 01 | 03 | 07 |
| F950 | F957 | F9M57 |

| Item | Part # | Description |
|---|---|---|
| 1 | 566F522 x Fin | Escutcheon - TH950 |
| | 566F532 x Fin | Escutcheon - TH910 |
| | 566F542 x Fin | Escutcheon - TH957 |
| | 566F552 x Fin | Escutcheon - TH955, TH959 |
| 2 | 566F50M x Fin | Thumbpiece - TH910, TH955, TH959 |
| 3 | 566F572 x Fin | Grip |
| 4 | 677F118 | Screw, Set 1/4-20 x 5/8 - TH910, TH955, TH959 |
| 5 | 566F588 | Spacer, Grip - TH910, TH955, TH959 |
| 6 | 651F468 | Thumbpiece Support Bracket - TH910, TH955, TH959 |
| 8 | 651F448 | Lock Washer |
| 9 | 651F418 | Screw, RHM-PH #1/4-20 x 5/8" - TH950, TH957 |
| | 704F898 | Screw, PHM-PH #1/4-20 x 1" - TH910, TH955, TH959 |
| 10 | 651F498 | Thumbpiece Slider - TH910, TH955, TH959 |
| 11 | 651F488 | Thumbpiece Pin - TH910, TH955, TH959 |
| 13 | 651F478 | Thumbpiece Spring - TH910, TH955, TH959 |
| 14 | 651F545 | Clutch Housing SA - TH910, TH955, TH959 |
| 15 | 651F398 | Spring, Bushing, Comp - TH910, TH955, TH959 |
| 16 | 651F408 | Compression Spring - TH910, TH955, TH959 |
| 17 | 566F598 | Spindle SA - TH910, TH955, TH959 |
| | 655F698 | Spindle SA - TH910, TH955, TH959 |
| 18 | 651F508 | Screw, PHT-T-PH #6 x 3/8" - TH910, TH955, TH959 |
| 19 | 651F438 | Threaded Post |
| 20 | 386F018 | Retaining Ring |
| 21 | 655K03MSECFIN | Rim Cylinder Assembly - TH955, TH959 (Non X Class) |
| | 655K04MSECFIN | Rim Cylinder Assembly - TH955, TH959 (X Class) |
| | 684K40MSECFIN | Rim Cylinder Assembly - TH957 (Non X Class) |
| | 684K43MSECFIN | Rim Cylinder Assembly - TH957 (X Class) |
| 22 | 651F675 | Cylinder Housing SA - TH955, TH959 |
| | 651F425 | Nightlatch Cylinder Housing - TH957 |
| 23 | 652F148 x Fin | Screw Packet - 1-3/4" - 2" doors |
| | 652F158 x Fin | Screw Packet - 2-1/4" doors |
| 24 | 651F10M x Fin | Bottom Escutcheon SA |

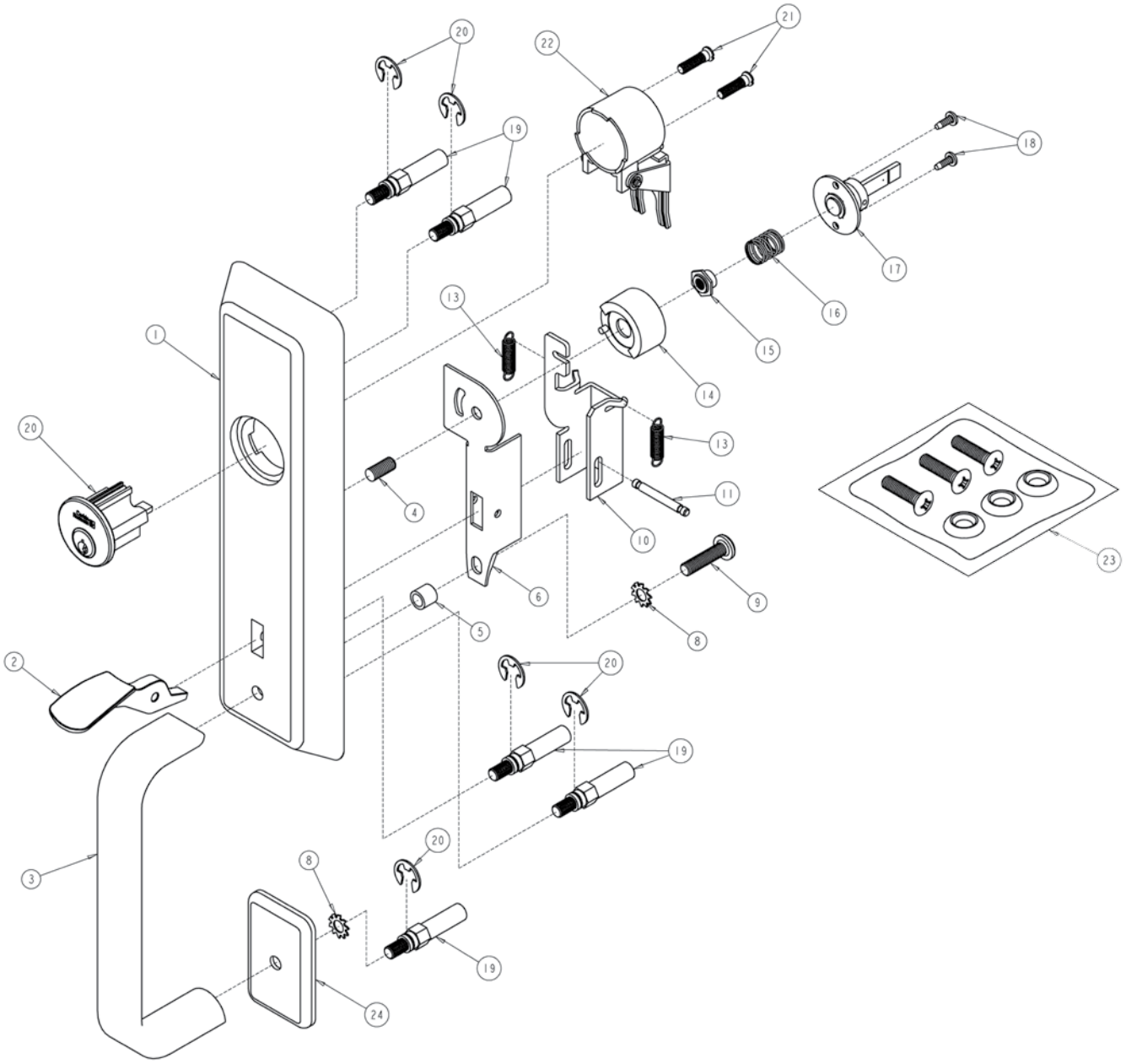
1
2
3
4
5
6
8
9
10
11
13
14
15
16
17
18
19
20
21
22
23
24

| Item | Part # | Description |
|---|---|---|
| 1 | 566F532 x Fin | Escutcheon - TH9M10 |
| | 566F552 x Fin | Escutcheon - TH9M55 |
| | 566F562 x Fin | Escutcheon - TH9M57 |
| 2 | 566F51M x Fin | Thumbpiece - TH9M10, TH9M55 |
| 3 | 566F572 x Fin | Grip |
| 5 | 566F588 | Spacer, Grip - TH9M10, TH9M55 |
| 6 | 651F578 | Thumbpiece Support Bracket - TH9M10, TH9M55 |
| 7 | 651F568 | Thumbpiece Tab - TH9M10, TH9M55 |
| 8 | 651F448 | Lock Washer |
| 9 | 651F418 | Screw, RHM-PH #1/4-20 x 5/8" - TH9M57 |
| | 704F898 | Screw, PHM-PH #1/4-20 x 1" - TH9M10, TH9M55 |
| 11 | 651F587 | Thumbpiece Pin - TH9M10, TH9M55 |
| 12 | 651F608 | Retaining Ring - TH9M10, TH9M55 |
| 13 | 651F028 | Mortise Thumbpiece Spring - TH9M10, TH9M55 |
| 19 | 651F438 | Threaded Post |
| 20 | 386F018 | Retaining Ring |
| 21 | 504K57MSECFIN | Mortise Cylinder Assembly - TH9M55, TH9M57 (Non X Class) |
| | 594K24MSECFIN | Mortise Cylinder Assembly - TH9M55, TH9M57 (Non X Class) |
| 23 | 652F148 x Fin | Screw Packet - 1-3/4" - 2" doors |
| | 652F158 x Fin | Screw Packet - 2-1/4" doors |
| 24 | 651F10M x Fin | Bottom Escutcheon SA |

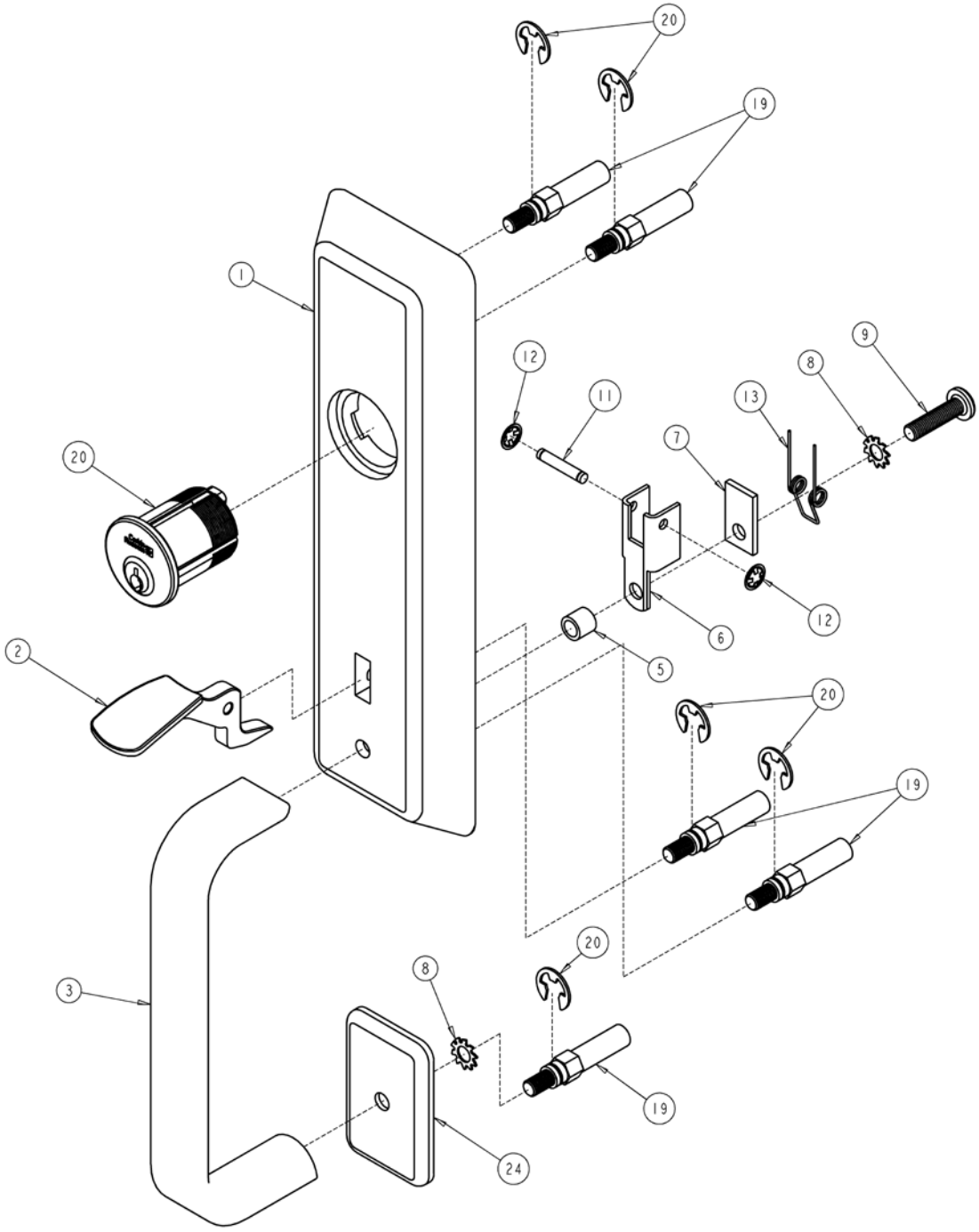
20
19
1
12
11
9
8
13
7
20
12
6
2
5
20
19
20
8
3
19
24

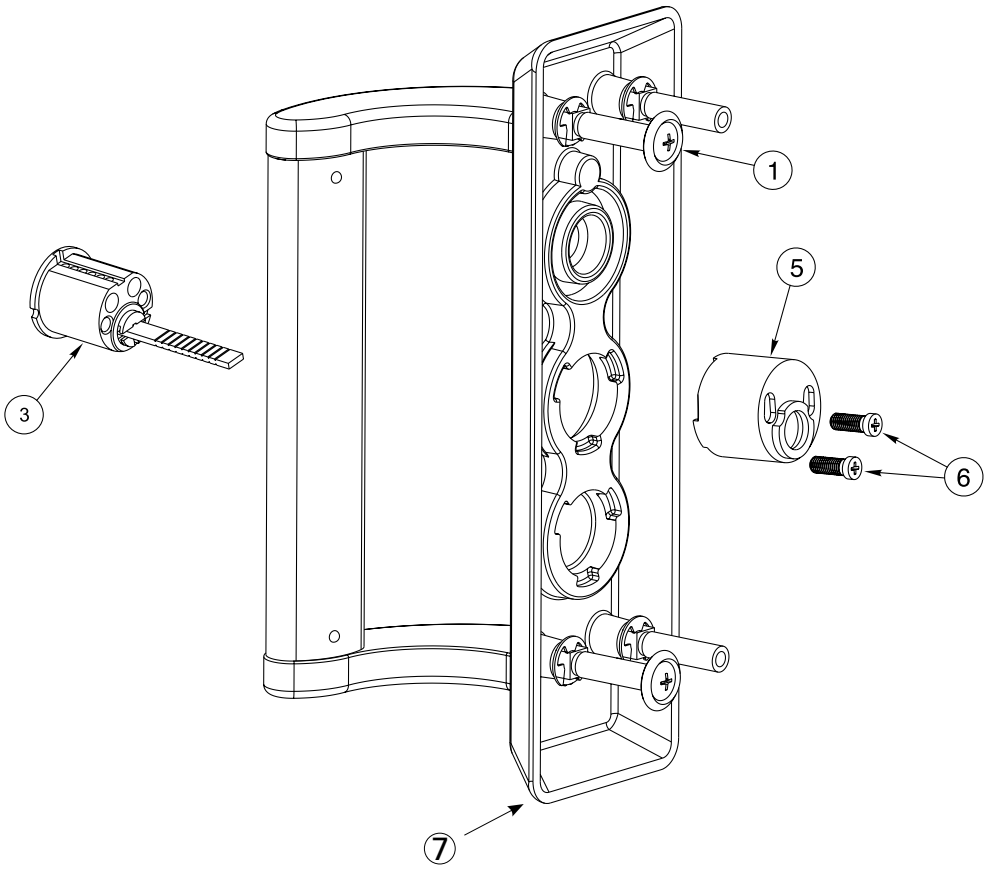


| 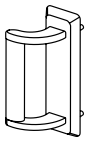 | 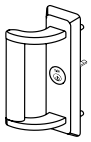 | 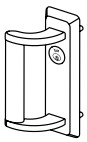 |
|---|---|---|
| **Dummy Pull** | **Nightlatch** | **Mortise Nightlatch** |
| 02 | 03 | 03 |
| P950 | P957 | P9M57 |

| Item | Part No. | Description |
|---|---|---|
| 1 | 652F12 x Fin<br>652F13 x Fin | Screw Packet, Mtg.<br>1-3/4" - 2" Door<br>2-1/4" Door<br>***Consists of the following:***<br>Screw 1/4-20 x 1 OPHMS(2)<br>Washer #14 Finish (2) |
| 3 | ***See Pages 63-64*** | Cylinder, Rim or Mortise |
| 5 | 651F425 | Housing, Cylinder (681F) |
| 6 | 655F028 | Screw, Cylinder Mtg. (2) |
| 7 | <br>711F22 x Fin<br>711F23 x Fin<br>7155F53 x Fin | Escutcheon & Pull Assembly<br>P950<br>P957<br>P9M57 |

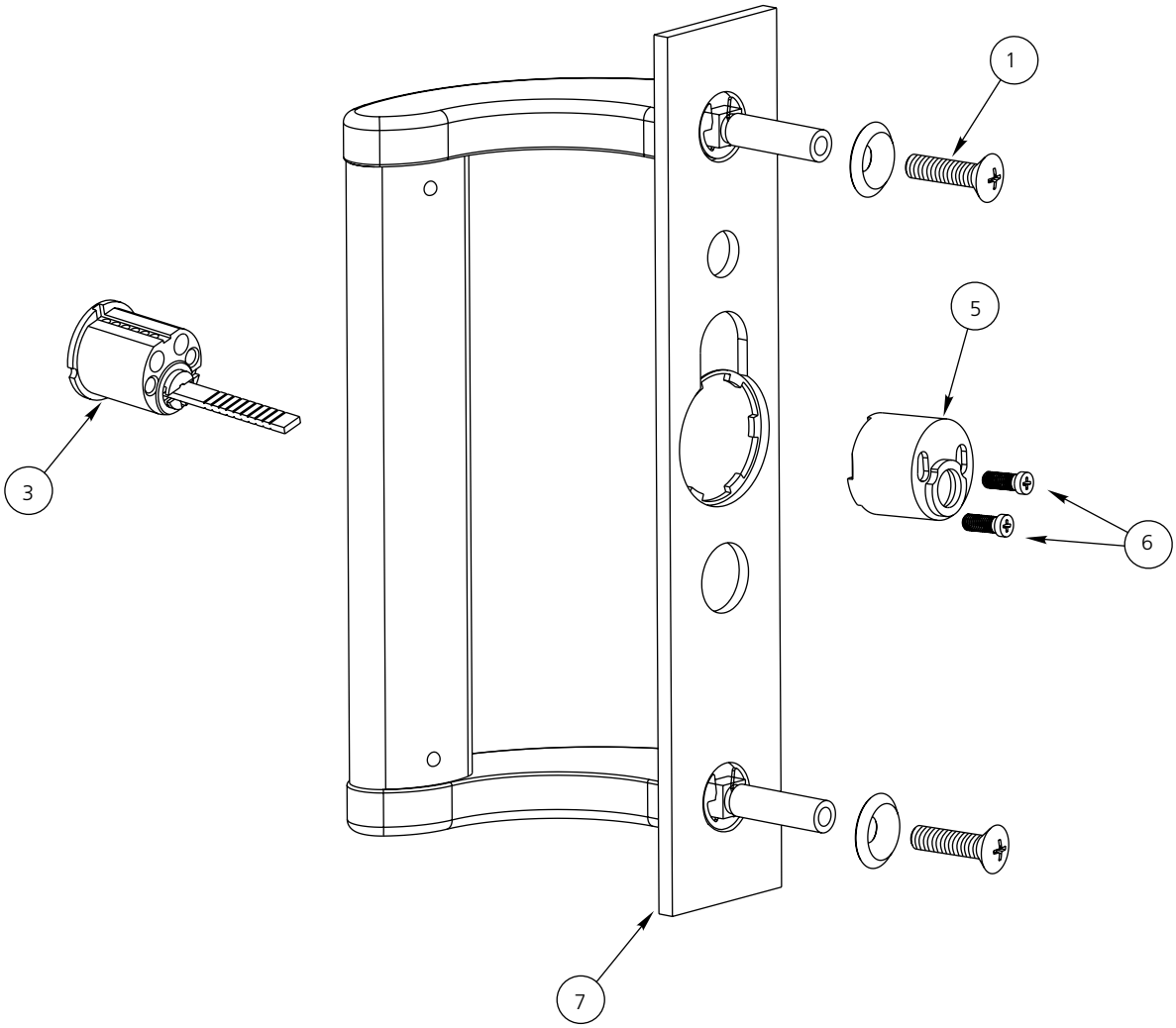


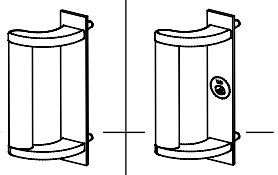

| Dummy Pull | Nightlatch |
|---|---|
| 02 | 03 |
| P1050 | P1057 |

| Item | Part No. | Description |
|---|---|---|
| 1 | | Screw Packet, Mtg. |
| | | ***Consists of the following:*** |
| | 652F12 x Fin | Screw 1/4-20 x 1 OPHMS(2) |
| | 652F13 x Fin | Washer #14 Finish (2) |
| 3 | ***See Pages 63-64*** | Cylinder, Rim |
| 5 | 651F425 | Housing, Cylinder |
| 6 | 655F028 | Screw, Cylinder Mtg. (2) |
| 7 | 676F12 x Fin | Escutcheon & Pull Assembly (P1050) |
| | 676F13 x Fin | Escutcheon & Pull Assembly (P1057) |

| Item | Part No. | Description |
|---|---|---|
| 1 | | Escutcheon Assembly |
| | 651F02 x Fin (Std. lever) | *855, *859 |
| | 651F02 x Fin (Muséo Lever) | |
| | 651F03 x Fin (Std. lever) | *810, *850 |
| | 651F03 x Fin (Muséo lever) | |
| 2 | 677F04 X Fin | Lustra |
| | 677F05 X Fin | Newport |
| | 677F13 X Fin | Essex |
| | 677F14 X Fin | Regis |
| | 677F15 X Fin | Citation |
| | 677F16 X Fin | Armstrong |
| | 677F26 X Fin | Dirke RHR |
| | 677F27 X Fin | Dirke LHR |
| | 677F28 X Fin | Princeton |
| | 698F31 X Fin | Tuscany |
| | 698F32 X Fin | Merlot |
| | 698F64 X Fin | Frascati RHR |
| | 698F66 X Fin | Frascati LHR |
| | 698F68 X Fin | Zinfandel RHR |
| | 698F70 X Fin | Zinfandel LHR |
| | | Knob & Spindle SA |
| | 656F45 X Fin | Global |
| | ***See Page 62*** | Muséo Levers |
| 3 | ***See Pages 63-64*** | Rim Cylinder |
| 4 | ***See Pages 63-64*** | Cylinder Collar |
| 5 | | Housing & Cam Assembly |
| | 651F965 | *855, *859, Housing, Cyl. |
| | 655F665 | *810, *850 |
| 6 | 655F028 | Screw, Cylinder Mounting (2) |
| 7 | 656F658 | Screw, NL Function |
| 16 | | Thimble Insert, Nylon ***Not Shown*** |
| | 118F299 | Standard |
| | 651F389 | Knob |
| | 806F069 | Muséo |
| 19 | 651F408 | Spring Under Tailpiece ***Not Shown*** |
| 25 | 651F858 | Plate, Cover |
| 26 | 651F948 | Spring, Extension (Levers Only) |
| 27 | 651F928 | Nut, Spring Post (Levers Only) |

| Item | Part No. | Description |
|---|---|---|
| 2 | 656F46 x Fin | Global Knob & Spindle Assembly |
| | 652F84 x Fin | Essex |
| | 652F87 x Fin | Lustram |
| | 652F90 x Fin | Regis |
| | 652F93 x Fin | Citation |
| | 652F96 x Fin | Dirke RHR |
| | 652F99 x Fin | Dirke LHR |
| | 653F02 x Fin | Newport |
| | 653F05 x Fin | Armstrong |
| | 653F08 x Fin | Princeton |
| | ***See Page 62*** | Muséo Levers |
| 28 | | Rack & Tailpiece Assy. Levers/Knobs |
| | 651F828 | *810, *855, *859 |
| | 652F218 | *850 |
| 29 | 651F538 | Lever, Clutch |
| 30 | 651F838 | Pin, Clutch Lever |
| 31 | 651F898 | Retainer, Clutch Lever Pin (2) |
| 32 | 651F888 | Nut, Cover Plate (2) ***Not Shown*** |
| 33 | 652F228 | Cam ***Not Shown*** |
| 34 | 652F239 | Bushing, Nylon ***Not Shown*** |
| 35 | 651F848 | Washer, Grip ***Not Shown*** |
| 36 | 651F878 | Screw, 8-32 x 7/16, Spindle ***Not Shown*** |
| 37 | | Spring, Rack (2) |
| | 651F938 | Lever |
| | 651F868 | Knob, Thumbturn |
| 38 | 651F17 x Fin | Thimble - Std. Levers ***Not Shown*** |
| | 806F22 x Fin | Thimble - Muséo Levers ***Not Shown*** |

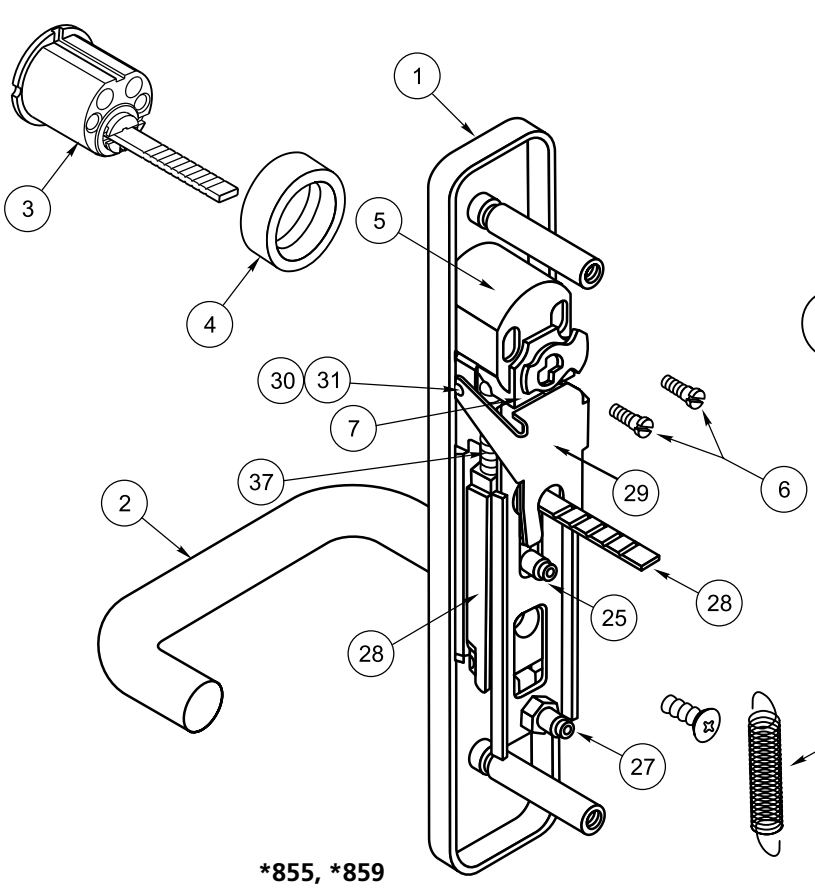


*855, *859

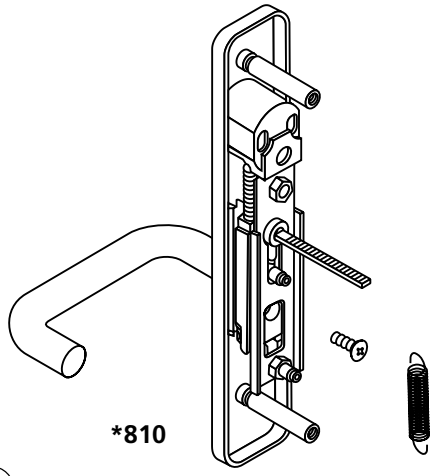

*810

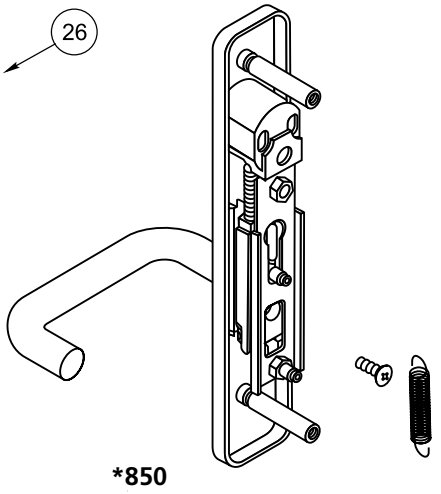

*850

| | | | | | |
|---|---|---|---|---|---|
|  |  | | 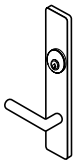 | 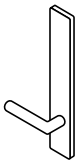 | |
| **Cylinder Controls Knob** | **Passage Trim Knob** | **Rigid Dummy Knob** | **Cylinder Controls Lever** | **Passage Trim Lever** | **Rigid Dummy Lever** |
| 09 | -- | 02 | 08 | -- | 02 |
| G855, G859 | G810 | G850 | *855, *859 | *810 | *850 |

| Item | Part No. | Description |
|---|---|---|
| | | Escutcheon Assembly |
| | 651F00 x Fin | F450 |
| 1 | 651F01 x Fin | F457 |
| | 651F02 x Fin | 0855, 0859 |
| | 652F03 x Fin | 0810 |
| 2 | 656F53 x Fin | Thumbturn / Spindle Assembly |
| 3 | ***See Pages 63-64*** | Cylinder, Rim |
| 4 | ***See Pages 63-64*** | Collar, Cylinder |
| | | Housing & Cam Assembly |
| 5 | 651F965 | 0855, 0859 |
| | 651F425 | F457, Housing, Cylinder |
| 6 | 655F028 | Screw, Cylinder Mounting (2) |
| 7 | 656F658 | Screw, NL Function |
| 16 | 651F389 | Thimble Insert, Nylon ***Not Shown*** |
| 19 | 651F408 | Spring Under Tailpiece for 0810, 0855, 0859 ***Not Shown*** |
| 25 | 651F858 | Plate, Cover |
| 28 | 651F878 | Rack & Tailpiece Assembly |
| 29 | 651F538 | Lever, Clutch 0855, 0859 |
| 30 | 651F838 | Pin, Clutch Lever 0855, 0859 |
| 31 | 651F898 | Retainer, Clutch Lever Pin (2) 0855, 0859 |
| 32 | 651F888 | Nut, Cover Plate (2) |
| 33 | 652F228 | Cam ***Not Shown*** |
| 34 | 652F239 | Bearing, Nylon ***Not Shown*** |
| 35 | 651F848 | Washer, Grip ***Not Shown*** |
| 36 | 651F878 | Screw, 8-32 x 7/16 Spindle ***Not Shown*** |
| 37 | 651F868 | Spring, Rack (2) |

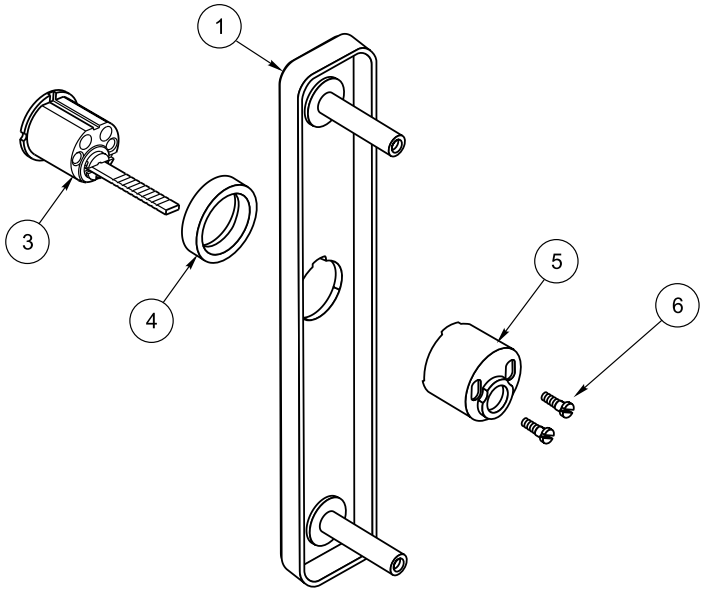


**F457**

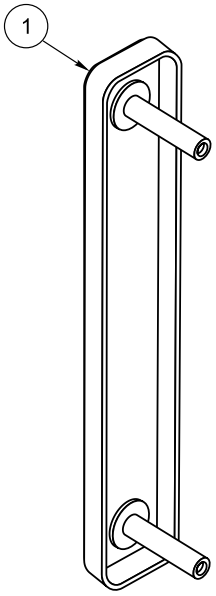


**F450**

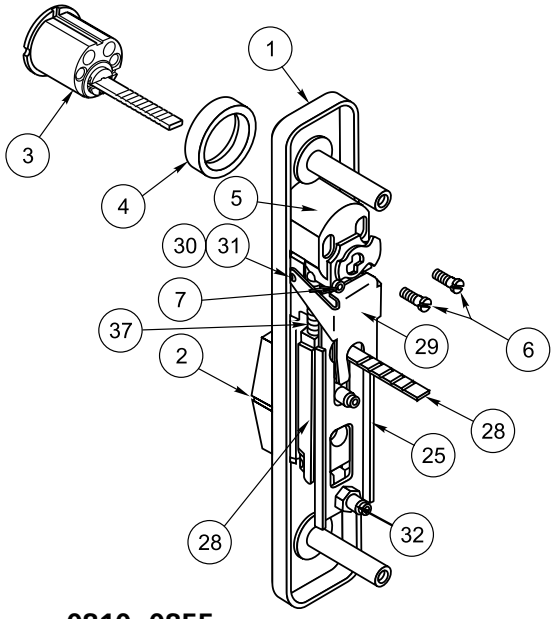


**0810, 0855, 0859**

|  |  |  |  |
|---|---|---|---|
| **(EO) Blank Plate** | **(NL) Access by Key** | **Cylinder Controls Thumbturn** | **Passage Active Turn** |
| -- | 03 | 11/12 | -- |
| F450 | F457 | 0855, 0859 | 0810 |

| Item | Part No. | Description |
|---|---|---|
| 1 | | Escutcheon Assembly |
| | 651F09 x Fin | T1440 Top |
| | 651F08 x Fin | T1455, T1459 Top |
| | 651F10 x Fin | Bottom |
| 2 | 566F50 x Fin | Thumbpiece |
| 3 | ***See Pages 63-64*** | Cylinder, Rim |
| 4 | ***See Pages 63-64*** | Collar, Cylinder |
| 5 | | Housing, Cylinder, Gear |
| | 655F675 | T1410 |
| | 655F685 | T1455, T1459 |
| 6 | 655F028 | Screw, Cylinder Mounting (2) |
| 7 | 656F658 | Screw, NL Function |
| 17 | 652F10 x Fin | 1 3/4" - 2" Door Screw Packet, Mtg. |
| | 652F11 x Fin | 2-1/4" Door Screw Packet, Mtg. |
| | | ***Consists of the following:*** |
| | | Screw, 1/4-20 x 1 OPHMS (1) |
| | | Washer, #14 Finish (1) |
| 19 | | Spring Under Tailpiece T1455, T1459, T1410 ***Not Shown*** |
| 25 | 651F858 | Plate, Cover |
| 28 | 695F608 | Rack & Tailpiece Assy |
| 29 | 651F538 | Lever, Clutch T1455, T1459 |
| 30 | 651F838 | Pin, Clutch Lever T1455, T1459 |
| 31 | 651F898 | Retainer, Clutch Lever Pin (2)T1455, T1459 |
| 32 | 651F888 | Nut, Cover Plate (2) |
| 37 | 651F868 | Spring, Rack (2) ***Not Shown*** |
| 38 | 651F37 x Fin | Pull, Offset |
| 39 | 651F438 | Screw Post (2) |
| 40 | 651F448 | Lockwasher, Screw (2) |
| 50 | 651F988 | Pin, 5/32 x 1-1/8, Groove ***Not Shown*** |

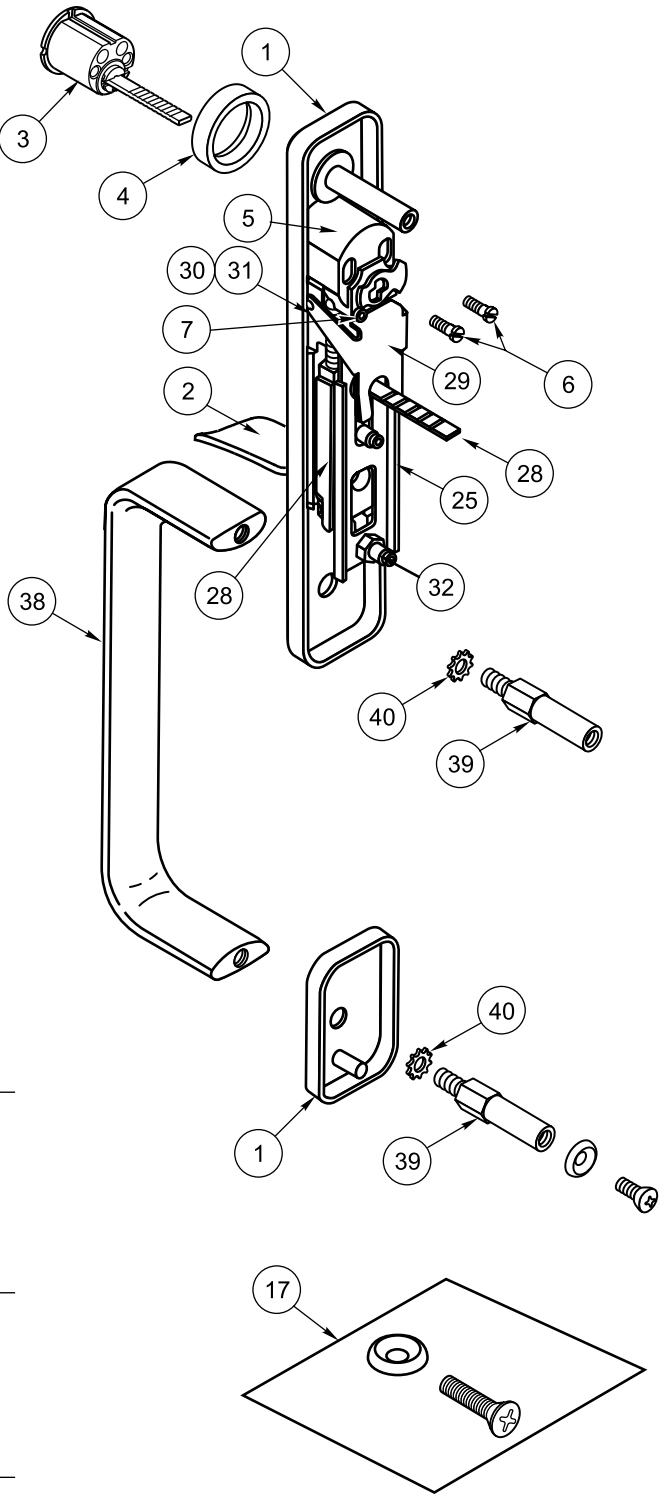


|  |  |
|---|---|
| **Cylinder Controls T-Piece** | **Passage Active T-Piece** |
| 05/06 | -- |
| T1455, T1459 | T1410 |

| Item | Part No. | Description |
|---|---|---|
| 1 | | Escutcheon Assembly |
| | 656F63 x Fin | 01455, 01459 top |
| | 656F62 x Fin | 01410 Top |
| | 651F10 x Fin | Bottom |
| 2 | 656F53 x Fin | Thumbturn/Spindle Assy. |
| 3 | ***See Pages 63-64*** | Cylinder, Rim |
| 4 | ***See Pages 63-64*** | Collar, Cylinder |
| 5 | | Housing , Cylinder |
| | 655F685 | 01455, 01459 |
| | 655F675 | 01410 |
| 6 | 655F028 | Screw, Cylinder Mounting (2) |
| 7 | 656F658 | Screw, NL Function |
| 16 | 651F389 | Thimble Insert, Nylon ***Not Shown*** |
| 17 | | Screw Packet, Mtg. |
| | 652F108 x Fin | 1-3/4" - 2" Door |
| | 652F118 x Fin | 2-1/4" Door |
| | | ***Consists of the following:*** |
| | | Screw, 1/4-20 x 1 OPHMS (1) |
| | | Washer, #14 Finish (1) |
| 19 | 651F408 | Spring Under Tailpiece 01455, 01459 ***Not Shown*** |
| 25 | 651F858 | Plate, Cover |
| 28 | 651F828 | Rack & Tailpiece Assy |
| 29 | 651F538 | Lever, Clutch 01455, 01459 |
| 30 | 651F838 | Pin, Clutch Lever 01455, 01459 |
| 31 | 651F898 | Retainer, Clutch Lever Pin (2) 01455, 01459 |
| 32 | 651F888 | Nut, Cover Plate (2) |
| 33 | 652F228 | Cam ***Not Shown*** |
| 34 | 652F239 | Bearing, Nylon ***Not Shown*** |
| 35 | 651F848 | Washer, Grip ***Not Shown*** |
| 37 | 651F868 | Spring, Rack (2) ***Not Shown*** |
| 38 | 651F37 x Fin | Pull, Offset |
| 39 | 651F438 | Screw Post (2) |
| 40 | 651F448 | Lockwasher, Screw Post (2) |
| 50 | 651F958 | Pin, 5/32 x 1-1/8, Groove ***Not Shown*** |

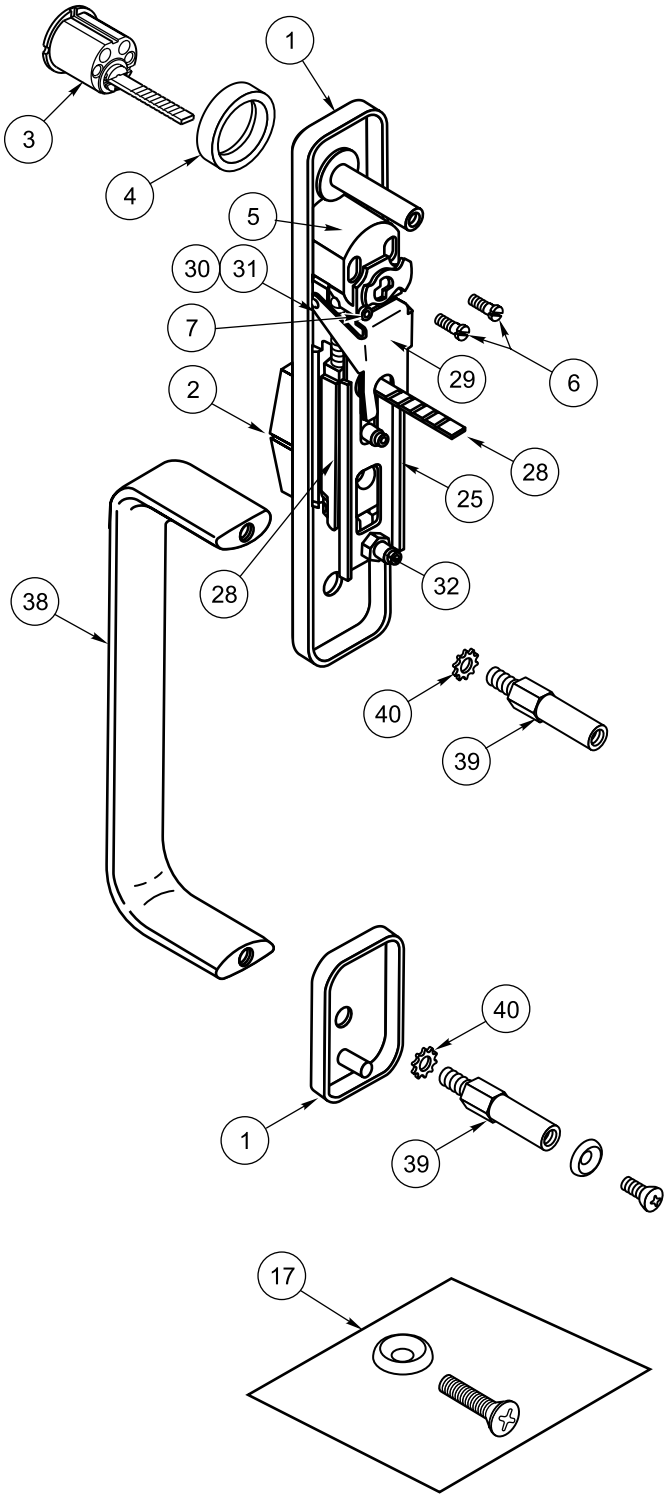


| 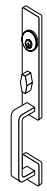 | 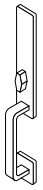 |
|---|---|
| **Cylinder Controls T-Turn** | **(Passage) Active T-Turn** |
| 11/12 | -- |
| 01455, 01459 | 01410 |

| Item | Part No. | Description |
|---|---|---|
| 1 | | Escutcheon Assembly |
| | 651F04 x Fin | T1457 Top |
| | 651F06 x Fin | T1450 Top |
| | 651F10 x Fin | Bottom |
| 3 | ***See Pages 63-64*** | Cylinder, Rim |
| 4 | ***See Pages 63-64*** | Collar, Cylinder |
| 5 | 651F425 | Housing, Cylinder T1457 |
| 6 | 655F028 | Screw, Cylinder Mounting (2) |
| 17 | | Screw Packet, Mtg. |
| | 652F108 x Fin | 1-3/4" - 2" Door |
| | 652F118 x Fin | 2-1/4" Door |
| | | ***Consists of the following:*** |
| | | Screw, 1/4-20 x 1 OPHMS (1) |
| | | Washer, #14 Finish (1) |
| 38 | 651F37 x Fin | Pull, Offset |
| 39 | 651F438 | Screw Post (2) |
| 40 | 651F448 | Lockwasher, Screw Post (2) |

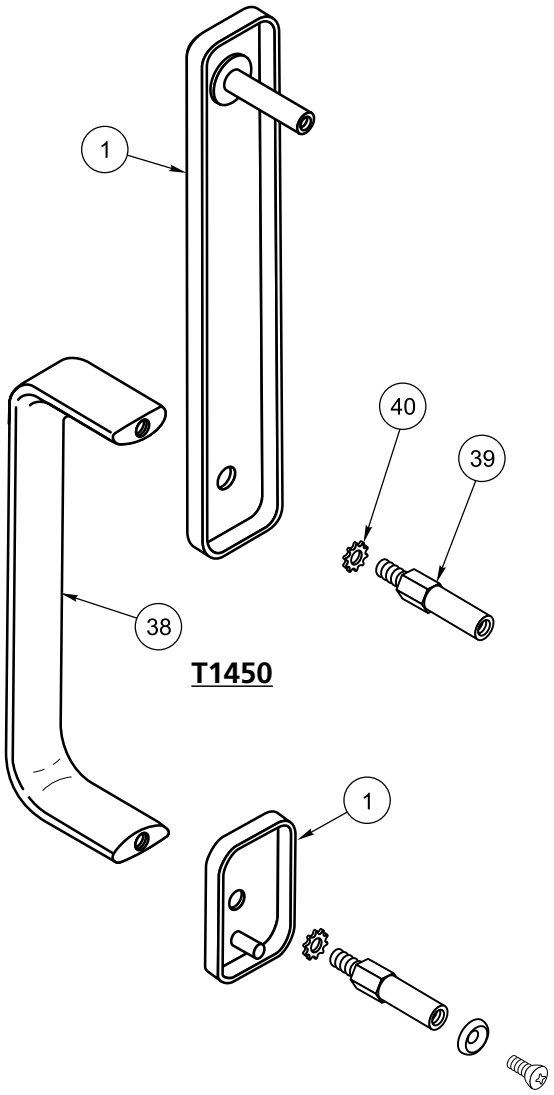


T1450

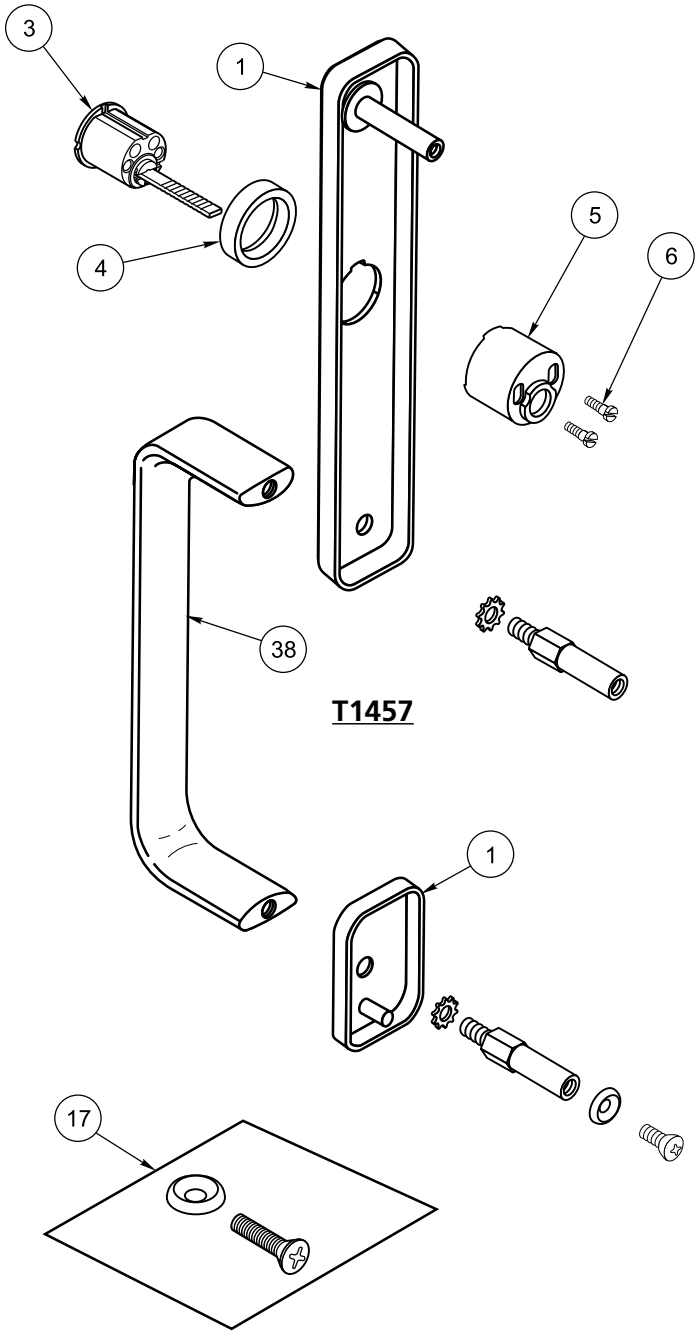


T1457

| 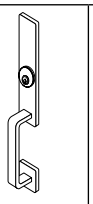 |  |
|---|---|
| **(NL) Cylinder by Pull** | **(DT) Pull Plate** |
| 03 | 02 |
| T1457 | T1450 |

| Georgia | |
|---|---|
| **Part No.** | **Description** |
| 800*02 x Fin | 101 |
| 800*807 x Fin | 102 |
| 800*12 x Fin | 103 |
| 800*17 x Fin | 104 |
| 801*72 x Fin | 124 |
| 801*77 x Fin | 125 |

| Jackson | |
|---|---|
| **Part No.** | **Description** |
| 800*22 x Fin | 105 |
| 801*27 x Fin | 119 RHR |
| 801*32 x Fin | 119 LHR |
| 801*42 x Fin | 121 RHR |
| 801*47 x Fin | 121 LHR |
| 801*52 x Fin | 122 RHR |
| 801*57 x Fin | 122 LHR |
| 801*92 x Fin | 127 RHR |
| 801*97 x Fin | 127 LHR |

| Marc | |
|---|---|
| **Part No.** | **Description** |
| 800*52 x Fin | 111 RHR |
| 800*57 x Fin | 111 LHR |
| 800*62 x Fin | 112 RHR |
| 800*67 x Fin | 112 LHR |
| 800*72 x Fin | 113 RHR |
| 800*77 x Fin | 113 LHR |
| 800*82 x Fin | 114 RHR |
| 800*87 x Fin | 114 LHR |
| 800*92 x Fin | 115 RHR |
| 800*97 x Fin | 115 LHR |
| 801*02 x Fin | 116 RHR |
| 801*07 x Fin | 116 LHR |
| 802*12 x Fin | 130 RHR |
| 802*17 x Fin | 130 LHR |
| 800*22 x Fin | 131 RHR |
| 800*827 x Fin | 131 LHR |
| 800*32 x Fin | 132 RHR |
| 800*37 x Fin | 132 LHR |

| Pablo | |
|---|---|
| **Part No.** | **Description** |
| 801*12 x Fin | 117 |
| 801*82 x Fin | 126 RHR |
| 801*87 x Fin | 126 LHR |

| Salvador | |
|---|---|
| **Part No.** | **Description** |
| 800*27 x Fin | 106 |
| 800*32 x Fin | 107 |
| 800*37 x Fin | 108 |
| 800*42 x Fin | 109 |
| 800*47 x Fin | 110 |
| 801*62 x Fin | 123 |
| 802*02 x Fin | 128 |

| Piet | |
|---|---|
| **Part No.** | **Description** |
| 802*46 x 629 | 21G 29 29 29 |
| 803*56 x 629 | 21G 29 30 29 |
| 804*91 x 630 | 21G 30 30 30 |
| 804*96 x 630 | 21G 30 29 30 |
| 802*82 x 630 | 21L 30 BK 30 |
| 802*87 x 630 | 21L 30 BN 30 |
| 802*92 x 629 | 21L 29 BK 29 |
| 807*97 x 629 | 21L 29 BN 29 |
| 803*02 x 629 | 21M 29 30 29 |
| 803*07 x 630 | 21S 30 BK 30 |
| 803*12 x 629 | 21S 29 BK 30 |
| 803*17 x 630 | 21W 30 BH 30 |
| 803*22 x 629 | 21W 29 BH 29 |
| 803*27 x 629 | 23M 29 00 30 |
| 803*42 x 629 | 23M 29 00 29 |
| 803*47 x 630 | 23M 30 00 30 |
| 803*52 x 630 | 23M 30 00 29 |
| 803*32 x 629 | 25M 29 00 29 |
| 803*37 x 630 | 25M 30 00 30 |
| 804*877 x 629 | 27M 29 00 29 |
| 804*877 x 629 | 27M 30 00 30 |

### 700 Series KRM* & Cylinder Dogging

Mortise cylinders

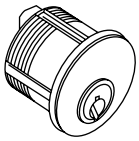

| Description | Part Number | Cylinder Dogging Collars | Key Removable Mullions* | |
|---|---|---|---|---|
| | | | Part Number | Cylinder Collar |
| 6-pin | 1000-118-A02 | N/A | 1000-118-A02 | None Required |
| 7-pin | 1000-114-A02-7 | 270F15 | 1000-114-A02-7 | None Required |
| 6-pin, IC | 1080-114-A02 | 270F15 | 1080-114-A02 | None Required |
| 7-pin, IC | 1080-112-A02-7 | 654F07 | 1080-112-A02-7 | 447F42 |
| 6-pin, IC, less core | 1070-114-A02 | 270F07 | 1070-114-A02 | None Required |
| 7-pin, IC, less core | 1070-112-A02-7 | 654F07 | 1070-112-A02-7 | 447F42 |
| 6-pin, Security | 1010-118-A02 | N/A | 1010-118-A02 | None Required |
| 6-pin, Security IC | 1090-114-A02 | 270F15 | 1090-114-A02 | None Required |
| 7-pin, Pyramid Security | 1027-114-A02 | 270F15 | 1027-114-A02 | None Required |
| 7-pin, Pyramid Security IC | 1037-114-A02 | 270F15 | 1037-114-A02 | None Required |
| 7-pin, Pyramid High Security | 1020-114-A02 | 270F15 | 1020-114-A02 | None Required |
| 7-pin, Pyramid IC High Security | 1030-114-A02 | 270F15 | 1030-114-A02 | None Required |

*The 700 series key removable mullion was discontinued on January 1, 2010. The cylinders and cylinder rings are listed for reference only.

### 900 Series Trim

Rim cylinders

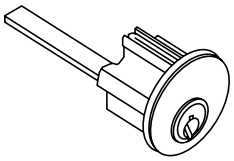

| Description | Part Number | Cylinder Collar | 57 Function Part Number | Cylinder Collar** |
|---|---|---|---|---|
| 6-pin | 3000-058 | None Required | 3000-200N* | None Required |
| 7-pin | 3000-058-7 | 422F88 | 3000-200-7 | 422F88 |
| 6-pin, IC | 3080-058 | 422F88 | 3080-178 | 422F88 |
| 7-pin, IC | 3080-058-7 | 686F98 | 3080-178-7 | 686F98 |
| 6-pin, IC, less core | 3070-058 | 422F88 | 3070-178 | 422F88 |
| 7-pin, IC, less core | 3070-058-7 | 686F98 | 3070-178-7 | 686F98 |
| 6-pin, Security | 3010-058 | None Required | 3010-200 | 422F88 |
| 6-pin, Security IC | 3090-058 | 422F88 | 3090-178 | 422F88 |
| 7-pin, Pyramid | 3020-058 | 422F88 | 3020-200N | 422F88 |
| 7-pin, Pyramid IC | 3030-058 | 422F88 | 3030-178 | 422F88 |
| 7-pin, Pyramid Security | 3027-058 | 422F88 | 3027-200N | 422F88 |
| 7-pin, Pyramid Security | 3037-058 | 422F88 | 3037-178 | 422F88 |

*For K157, substitute -200
**K157 uses the 270F15 cylinder ring

### 900 Series KRM

Mortise cylinders

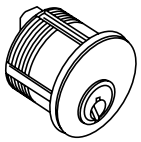

**900 Series KRM**
Mortise cylinders

| Description | Part Number | Quick Code | 900 Series Cylinder Collar | | | WS700 Series Cylinder Collar | | |
|---|---|---|---|---|---|---|---|---|
| | | | 1-1/8" | 1-1/4" or 1-1/4" IC | 1-1/2" IC | 1-1/8" | 1-1/4" or 1-1/4" IC | 1-1/2" IC |
| 6-Pin | 1000-118-A62 | 6P | 610F01* | 447F43* | 609F37* | 447F42* | 610F01* | 609F36* |
| 7-Pin | 1000-114-A62-7 | 7P | | | | | | |
| 6-Pin, IC | 1080-114-A62 | C6 | | | | | | |
| 7-Pin, IC | 1080-112-A62-7 | C7 | | | | | | |
| 7-pin, Pyramid High Security | 1020-114-A62 | PHS | | | | | | |
| 7-pin, Pyramid Security | 1027-114-A62 | PS | | | | | | |
| 7-pin, Pyramid High Security IC | 1030-114-A62 | PCHS | | | | | | |
| 7-pin, Pyramid Security IC | 1037-114-A62 | PCS | | | | | | |
| Security | 1010-118-A62 | HS | | | | | | |
| Security IC | 1090-114-A62 | CHS | | | | | | |
| 6-pin, IC, less core | 1070-114-A62 | CL6 | | | | | | |
| 7-pin, IC, less core | 1070-112-A62-7 | CL7 | | | | | | |

*Specify Finish

### 900 Series Mortise Trim

Mortise cylinders

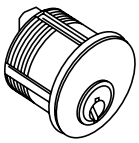

| Description | Part Number | Cylinder Collar |
|---|---|---|
| 6-pin | 1000-112-A02 | None Required |
| 7-pin | 1000-112-A02-7 | None Required |
| 6-pin, IC | 1080-112-A02 | None Required |
| 7-pin, IC | 1080-112-A02-7 | None Required |
| 6-pin, IC, less core | 1070-112-A02 | None Required |
| 7-pin, IC, less core | 1070-112-A02-7 | None Required |
| 6-pin, Security | 1010-112-A02 | None Required |
| 6-pin, Security IC | 1090-112-A02 | None Required |
| 7-pin, Pyramid High Security | 1020-112-A02 | None Required |
| 7-pin, Pyramid IC High Security | 1030-112-A02 | None Required |
| 7-pin, Pyramid Security | 1027-112-A02 | None Required |
| 7-pin, Pyramid Security IC | 1037-112-A02 | None Required |

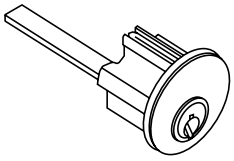

**ED5602 Double Cylinder Exit Device**
Rim cylinders

### Inside Cylinder For ED5602 Double Cylinder Exit Device
Rim cylinders

| Description | Part Number | Cylinder Collar |
|---|---|---|
| 6-pin | 3000-200 | 270F15 |
| 7-pin | 3000-200-7 | 654F07 |
| 6-pin, IC | 3080-178 | 654F07 |
| 7-pin, IC | 3080-178-7 | 654F08 |
| 6-pin, IC, less core | 3070-178 | 654F07 |
| 7-pin, IC, less core | 3070-178-7 | 654F08 |
| 6-pin, Security | 3010-200 | 654F07 |
| 6-pin, Security IC | 3090-178 | 654F07 |
| 7-pin, Pyramid | 3020-200 | 654F07 |
| 7-pin, Pyramid IC | 3030-178 | 654F07 |
| 7-pin, Pyramid Security | 3027-200 | 654F07 |
| 7-pin, Pyramid Security | 3037-178 | 654F07 |

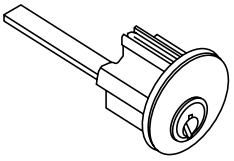

**ED5202 Double Cylinder Exit Device**
Rim cylinders

### ED5202 Double Cylinder Exit Device
Rim cylinders

| Description | Part Number | Cylinder Collar |
|---|---|---|
| 6-pin | 3000-138 | 270F15 |
| 7-pin | 3000-138-7 | 654F07 |
| 6-pin, IC | 3080-114 | 654F07 |
| 7-pin, IC | 3080-114-7 | 654F08 |
| 6-pin, IC, less core | 3070-114 | 654F07 |
| 7-pin, IC, less core | 3070-114-7 | 654F08 |
| 6-pin, Security | 3010-138 | 654F07 |
| 6-pin, Security IC | 3090-114 | 654F07 |
| 7-pin, Pyramid | 3020-138 | 654F07 |
| 7-pin, Pyramid IC | 3030-114 | 654F07 |
| 7-pin, Pyramid Security | 3027-138 | 654F07 |
| 7-pin, Pyramid Security | 3037-114 | 654F07 |

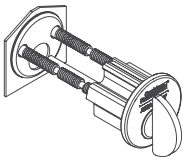

### Rim Thumbturn

| Description | Part Number |
|---|---|
| Rim Thumbturn - 1-3/8" | 3300 -138 |
| Rim Thumbturn - 1-3/8" - Ergonomic | 3300-138-M34 |
| Rim Thumbturn - 2" | 3300-200 |
| Rim Thumbturn - 2" - Ergonomic | 3300-200-M34 |

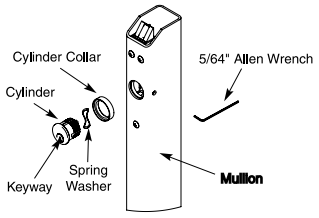


### 900 Series KRM Cylinder Collar Packet

| Mullion Series | Cylinder Length and Type | | | |
|---|---|---|---|---|
| | 1-1/8" | 1-1/4" | 1-1/4" IC | 1-1/2" IC |
| WS707AKM<br>WS708AKM | 447F42* | 610F01* | | 609F36* |
| 907BKM<br>908BKM<br>910KM | 610F01* | 447F43* | | 609F37* |

***Note: Cylinder collar packets contain a collar and spring washer.***
****Specify finish when ordering packets.***

## Rim Devices

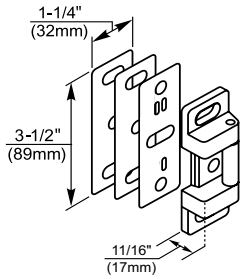


| standard | |
|---|---|
| 650F308 | ED5200 (A) |
| | ED4200M (A) |
| 730F778 | ED5200S (A) |
| | ED4200SM (A) |

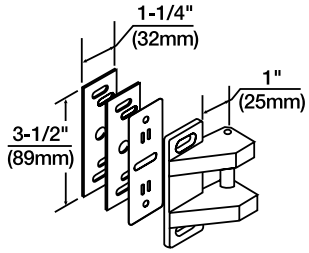


| optional (S02) | |
|---|---|
| 655F718 | ED5200 |
| | ED5200S |
| | ED4200S |
| | ED4200SM |

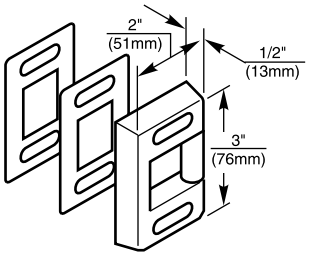


| standard | |
|---|---|
| 650F318 | ED4200 |
| | ED4200S |
| | 7200 Rim |

## Rim Devices

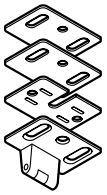

| standard | |
|---|---|
| 650F548 | ED5400 (A) Top |
| | ED5800 (A) Top |

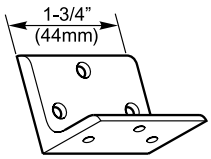


| standard | |
|---|---|
| 650F878 | Bracket for SVR Top Strike in Flush Transom Opening |

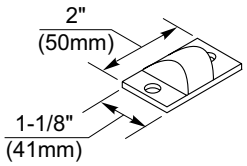


| standard | |
|---|---|
| 681F778 | ED5860B Top |

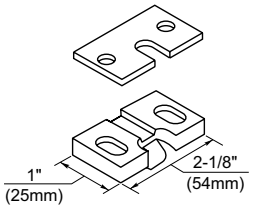


| standard | |
|---|---|
| 681F708 | ED5470B |

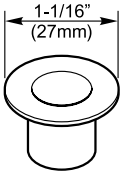


650F578

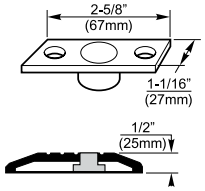


650F888

## Mortise Devices

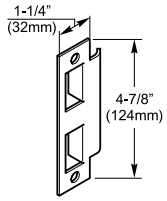


| standard | |
|---|---|
| 650L657020 | All mortise (non-Handed) |

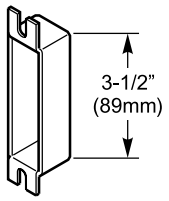


| standard box | |
|---|---|
| 120F768 | for ANSI Prep |

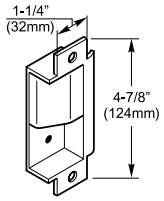


| open back strike | |
|---|---|
| 653L183016 | for door pair when code allows use |

## Shim Kits

### 724, 724NS
### For Surface Vertical Rod Exit Device

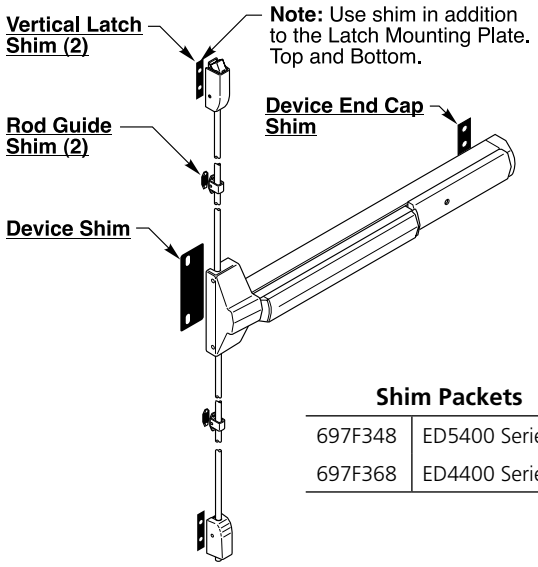


| Shim Packets | |
|---|---|
| 697F348 | ED5400 Series |
| 697F368 | ED4400 Series |

### 723, 723NS
### For Rim, Mortise, and CVR Exit Device

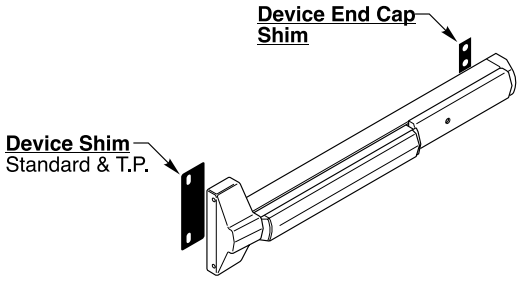


| Shim Packets | |
|---|---|
| 697F338 | ED5200, ED5600, ED5800 Series |
| 697F358 | ED4200, ED4800 Series |

### Cylinder Dogging Kits
Designed to convert a panic device from hex key dogging to cylinder dogging.

Not permitted on fire-rated devices.

| Bar Length | Part No. |
|---|---|
| 36" | 653F12 x Fin |
| 36" NS | 653F14 x Fin |
| 48" | 653F13 x Fin |

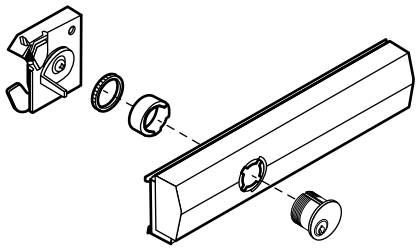

### Surface and Concealed Vertical Rod Extension Kits
Used to extend the height of standard length rods for 7110(F)(8'max), 7120, 7160(F), 7170(F), and 7210 Series exit devices.

| Rod Extension Assembly | |
|---|---|
| 2" | 655F15 x Fin (Panic) |
| 6" | 655F16 x Fin (Panic) |
| 12" | 655F17 x Fin (Panic) |
| 12" | 655F17 x Fin (Fire rated) |
| 24" | 684F42 x Fin (Fire rated) |

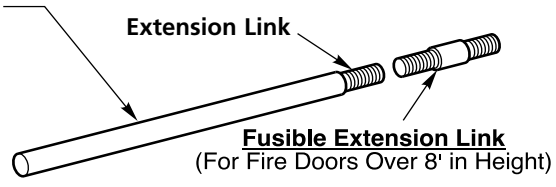


# Retro Fit Kits

### Schlage® Cam and Housing Assembly
Part Number: 720F688



**Handing**

**Left Hand Reverse:** Hinges on left, opens outward. For handed devices, specify LHR.

**Right Hand Reverse:** Hinges on right, opens outward. For handed devices, specify RHR.

Note: Doors with Panic-Exit and Fire Exit hardware must open out. Therefore, hands must be reverse bevel.

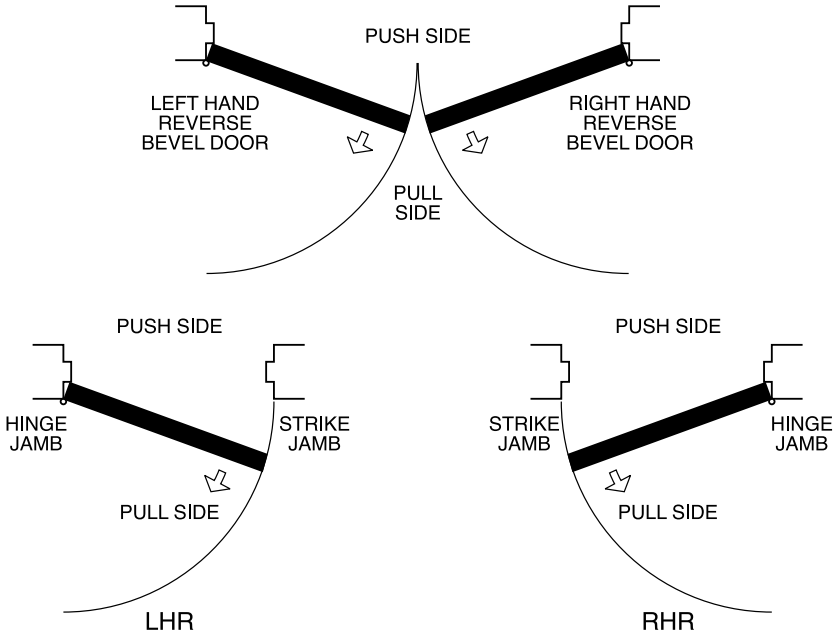


**Rim Devices**
**ED5200 (A), ED5200S (A), ED4200, ED4200S, ED4200SM (A), ED4200M (A) Series**

These devices are non-handed.

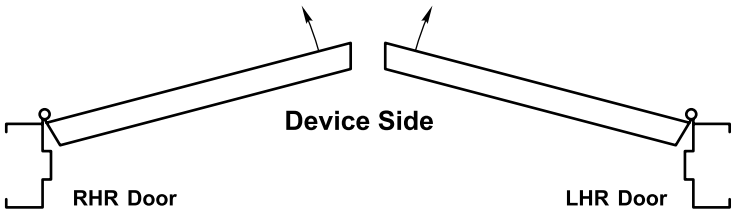


**Vertical Rod Devices, Surface and Concealed ED5400 (A), ED5470 (B), ED5800 (A), ED5860 (B), ED4400, ED4400M (A), ED4800, ED4800M (A)**

Remove four screws and vertical lifter assembly. Turn device to opposite (180 degrees) orientation, insert lifter assembly and reinstall screws.

NOTE: Lifter must fit under lift block as shown.

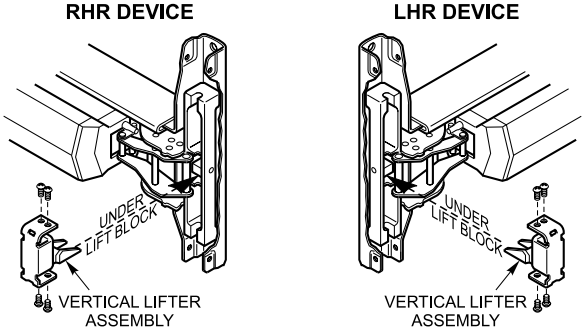

**Mortise Devices**
**5600(A) Series**
To reverse, remove latch bolt and deadlatch, flip both over and reinstall. Also flip cylinder set screw and clamp assembly.

Illustration depicts typical lockbody with cover removed. Only components relevant to lock handing are shown. Other components vary according to lock function.

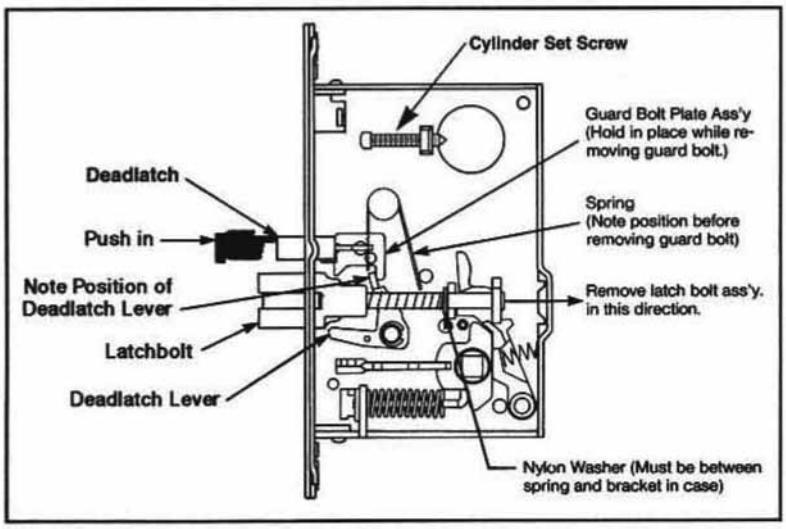


## x7 Lever Handle Trim

1. Remove cotter pin.
2. Remove castle nut.
3. Observe spring orientation:
   **LHR: Red spring** (part # 651F61-8)
   Short lead is at 11 o'clock and long lead is to lever side of stump at 6 o'clock.
   **RHR: Blue spring** (part # 651 F62-B)
   Short lead is at 11 o'clock and long lead is to lever side of stump at 6 o'clock.
4. Remove round housing, spring and spacer.
5. Note orientation of Mgap" which governs rotation in gear and remove gear.
6. Rotate lever 180°.
7. Flip gear over and reinstall, observing proper gap orientation for new direction of rotation:
   **LHR** 6 - 8 o'clock
   **RHR** 4 - 6 o'clock
8. Install spring of opposite hand (color). Place spring around spindle with long lead against gear and to lever side of post. Place housing (gap side toward lever) over spring and spindle until square in housing begins to slide down on spindle. While applying downward pressure on housing, wind short lead of spring toward lever until housing snaps Into place.
9. Replace spacer in housing. Spring, housing and spacer should now be oriented as indicated in step 3 above. Note: Housing gap will always be to the lever side and spring will be slightly pre loaded when properly installed.
10. Be sure lever thimble is seated properly in escutcheon. Reinstall nut but do not over tighten. Lever should rotate freely.
11. Replace cotter pin.

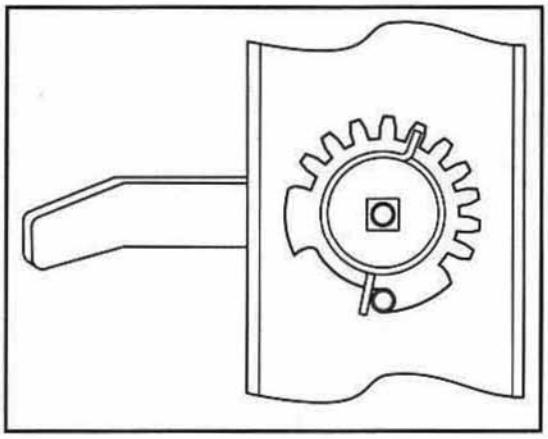
Right-hand reverse (blue spring)

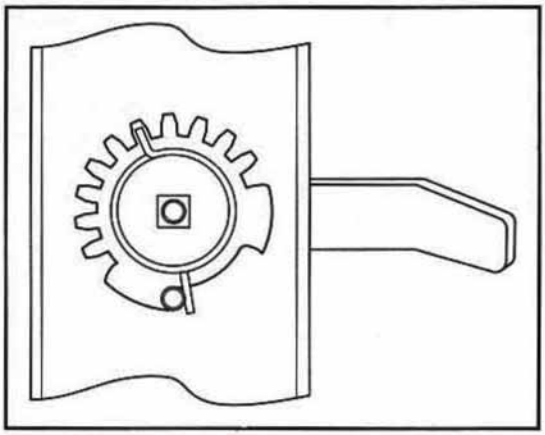
Left-hand reverse (red spring)

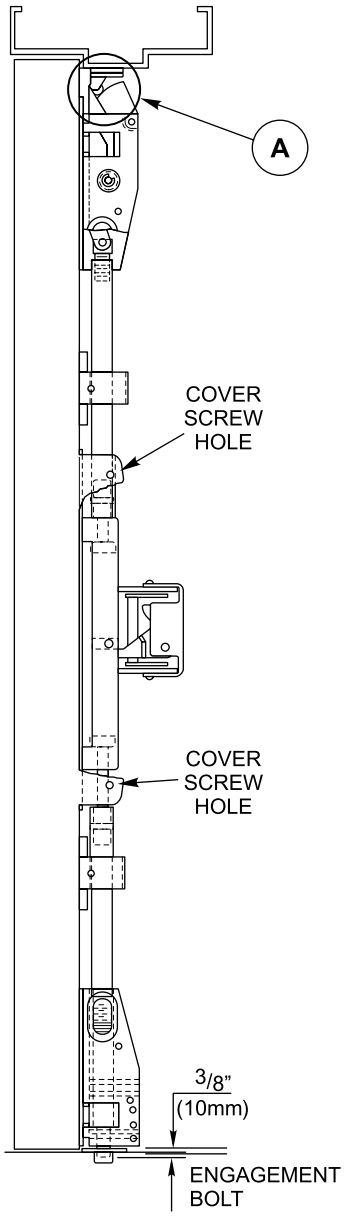


**ED5400**

If top latch does not engage properly, check alignment. When locked, latch bolt should not be preloaded by strike **(Area A)**. Shim or reposition strike if necessary.

Bolts extend automatically when door closes and top strike hits tripping lever. Top bolt should retract flat. Bottom bolt should travel 1/2" and engage 3/8" into strike in down position, without dragging on floor surface in up position.

**Rod Adjustment**

1. Remove active case cover screws and cover.
2. Remove rod guide cover screws and rod guide covers. Tilt rods, top and bottom, out of engagement in active case and out of rod guides.
3. **Adjust top rod first.** Push up on top rod to fully retract top latch with hold back feature engaged. With device in dogged position (panic devices) or Pushpad fully depressed (fire devices), adjust top rod so that the square head of the rod connector slides into engagement in the active case. Shorten rod an additional 1/2 turn.
4. **Adjust bottom rod.** With top rod engaged, top latch retracted in hold back position, and touch bar dogged or fully depressed, adjust bottom rod so that the deadbolt clears the strike by 1/16". The bottom rod should be in position in the active case with the square head of the connector hanging in the slide.
5. **Check device operation** by opening and closing the door. When present, operate the device with the outside trim. An additional minor adjustment may be required for full retraction and correct strike engagement.
6. Reinstall the rod guide covers and the active case cover.

**Maintenance**

1 . Periodically remove covers and coat mechanisms with an appropriate lubricant. This is regularly required in corrosive environments for proper product operation.
2. Check mounting fasteners periodically. Retighten if found loose. Apply screw locking compound or change part fasteners if screws continue to back out.
3. Periodic checks and adjustments of rods may be required to compensate for door or frame sag.

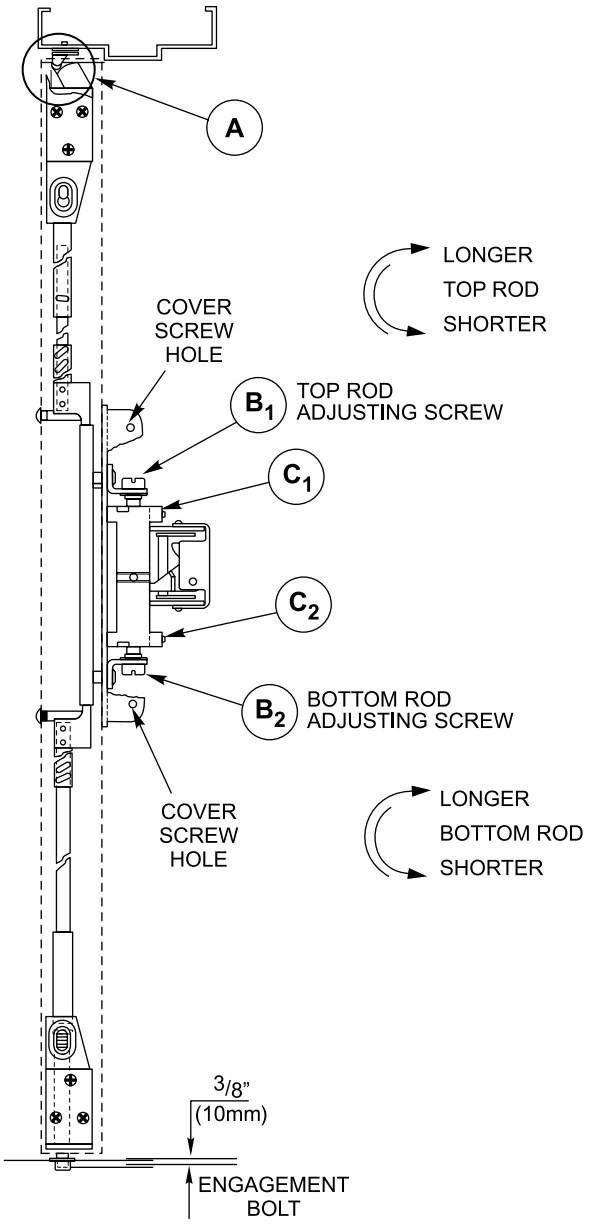


**ED5800**

Rods should move freely inside door. Bolts extend automatically when door closes and top strike is tripped. Top bolt should retract flat. Bottom bolt should travel 1/2" and engage 3/8" into strike in down position, without dragging on floor surface in up position.

If top latch does not engage properly check alignment. When locked, latch bolt should not be preloaded by strike (Area A). Shim or reposition strike if necessary.

**Rod Adjustment for Bolt Throw**

1. Remove Latch assembly cover screws and cover.
2. Use 3/32" Allen wrench to loosen set screws **$C_1$** and **$C_2$**.
3. Adjusting screws **$B_1$** and **$B_2$** only provide fine rod adjustment. If screws bottom out before proper device operation, door and device must be removed. Larger adjustments may then be made either by threading rod in or out, or by moving cotter pin to different hole in rod.
4. **Adjust top rod first.** With device in dogged position (panic devices) or Pushpad fully depressed (fire devices), adjust top rod so that the top latchbolt is flush and the hold back feature is engaged. Lengthen top rod an additional 1/2 turn.
5. **Adjust bottom rod.** With top latch retracted in hold back position, and touch bar dogged or fully depressed, adjust bottom rod so that the deadbolt clears the strike by 1/16". The bottom rod should be in position in the active case with the square head of the connector hanging in the slide.
6. **Check device operation** by opening and closing the door. When present, operate the device with the outside trim. An additional minor adjustment may be required for full retraction and correct strike engagement.
7. When finished, lock adjusting screws in place with Allen set screws.

   **Caution:** To avoid thread damage and provide positive locking, be sure Allen set screws engage flats on adjusting screws.

**Maintenance**

1. Periodically remove covers and coat exposed mechanisms with an appropriate lubricant. This is regularly required in corrosive environments for proper product operation.
2. Check mounting fasteners periodically. Retighten if found loose. Apply screw locking compound or change part fasteners if screws continue to back out.
3. Periodic checks and adjustments of rods may be required to compensate for door or frame sag.

1. Many problems with the operation of exit devices are caused by factors other than the device itself. Among the most common is a misalignment or an improper fit of the door within the frame.

2. Another common source of problems is improper installation. Even if all cutouts and screw holes are properly located, exit devices must be securely fastened to properly reinforced doors. Hollow doors and frames with a structural thickness (metal skin plus reinforcement, or solid hardwood) must have at least three full screw threads to be considered reinforced.

3. Most problems with dogging occur on vertical rod devices. When the dogging function is hard to engage or will not work at all, the rods may be incorrectly adjusted allowing the mechanism to bottom out. Readjust rods per the device instructions or as outlined on the previous pages.

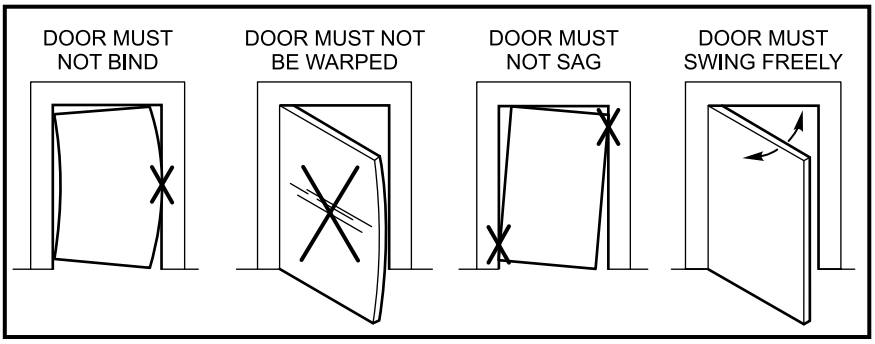


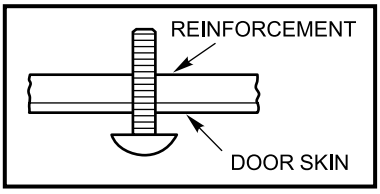


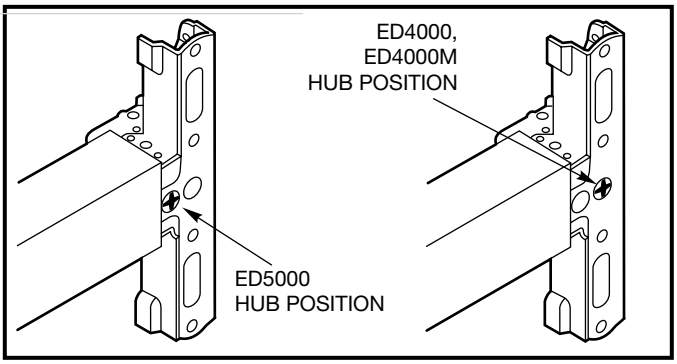


DIFFERENCE IN ACTIVE HEADS

ASSA ABLOY is the global leader in door opening solutions, dedicated to satisfying end-user needs for security, safety and convenience

Corbin Russwin

ASSA ABLOY

**In U.S.**
Corbin Russwin
Architectural Hardware
225 Episcopal Road
Berlin, CT 06037
Phone: 800-543-3658
Fax: 800-447-6714
corbinrusswin.com

**In Canada**
ASSA ABLOY Door
Security Solutions Canada
160 Four Valley Drive
Vaughan, Ontario
Canada L4K 4T9
Phone: 800-461-3007
Fax: 905-738-2478
www.assaabloy.ca

For more information regarding Corbin Russwin Locksets, Exit Devices, Door Controls and Key Systems, contact your authorized Corbin Russwin Distributor or Sales Representative.

Corbin Russwin and Design® is a registered trademark of Corbin Russwin, Inc, an ASSA ABLOY Group company. Other products' brand names may be trademarks or registered trademarks of their respective owners and are mentioned for reference purposes only. These materials are protected under US copyright laws. All contents current at time of publication. Corbin Russwin, Inc., an ASSA ABLOY Group company reserves the right to change availability of any item in this catalog, its design, construction, and/or its materials. Copyright © 2000-2016 Corbin Russwin, Inc., an ASSA ABLOY Group company. All rights reserved. Reproduction in whole or in part without the express written permission of Corbin Russwin, Inc. is prohibited.

45255-9/16