ALLEGION

VON DUPRIN®

Chexit®



Overview

Designed for use on delayed exit applications, the Chexit system is ideal for controlled areas. This concept in delayed exit systems combines life safety with the needs of security and meets all requirements of NFPA 101 for Special locking arrangement.

The Chexit system will keep an exit door secured for a 15 second period, yet tied into the fire alarm system will release immediately when an alarm condition exists. All controls, auxiliary locking, local alarm and remote signaling output are self-contained in the Chexit assembly, providing safe, secure, easy to install and simple to operate door control and exit hardware.

The Chexit system is ideal for highly controlled areas such as airports, hospitals, government facilities and development labs, retail stores, libraries and security facilities.

Chexit controlled exit device can be used on panic or fire exit hardware applications.

Features and benefits

- Non-handed
- Field sizable
- ¾“ (19mm) throw, latch bolt
- Deadlocking
- Internal RX switch detects attempt to exit (applying less than 15lbs to the push pad will cause this switch to start an irreversible alarm cycle)
- Nuisance alarm
- Remote alarm
- Key switch can arm, disarm or reset the Chexit
- Indicator lamp determines status of the Chexit
- Internal horn
- Door position input
- External inhibit input
- Fire alarm input
- Internal auxiliary lock
- User definable rearm time
- Factory definable delay

Chexit electrical specifications

Continuous duty	24VDC
Inrush	16 Amps
Holding	.3 Amp

Minimum door openings

Device	3' (914mm) Length	4' (121mm) Length
CX98/98-F/99/99-F	2' 10½" (864mm)	3' 4½" (1016mm)
CX9875/9875-F/9975/9975-F	2' 10" (864mm)	3' 4" (1016mm)
CX9827/9827-F/9927/9927-F	2' 10" (864mm)	3' 4" (1016mm)
CX9857/9857-F/9957/9957-F	2' 10" (864mm)	3' 4" (1016mm)
CX9847/9847-F/9947/9947-F	2' 9" (864mm)	3' 3" (991mm)
CX9848/9848-F/9948/9948-F	2' 9" (864mm)	3' 3" (991mm)
CX9849/9849-F/9949/9949-F	2' 9" (864mm)	3' 3" (991mm)
CX9849/9849-F/9949/9949-F	2' 9" (864mm)	3' 3" (991mm)

Minimum door opening 3' devices for 34" opening and 4' device for 40" opening

To order, specify:

- Use prefix CX, example CX99EO, 15 second delay furnished standard
- For other Chexit options consult Von Duprin pricebook

Chexit popular application

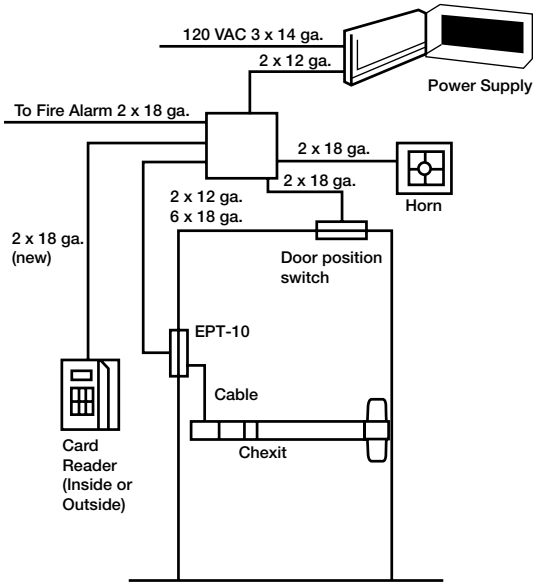

Allegion, the Allegion logo, Von Duprin and the Von Duprin logo are trademarks of Allegion plc, its subsidiaries and/or affiliates in the United States and other countries. All other trademarks are the property of their respective owners.

About Allegion

Allegion (NYSE: ALLE) creates peace of mind by pioneering safety and security. As a $2 billion provider of security solutions for homes and businesses, Allegion employs more than 7,800 people and sells products in more than 120 countries across the world. Allegion comprises 23 global brands, including strategic brands CISA®, Interflex®, LCN®, Schlage® and Von Duprin®. For more, visit **www.allegion.com.**

aptiQ ■ LCN ■ SCHLAGE ■ STEELCRAFT ■ VON DUPRIN

ALLEGION™

© 2014 Allegion
010102, Rev. 03/14
www.allegion.com/us