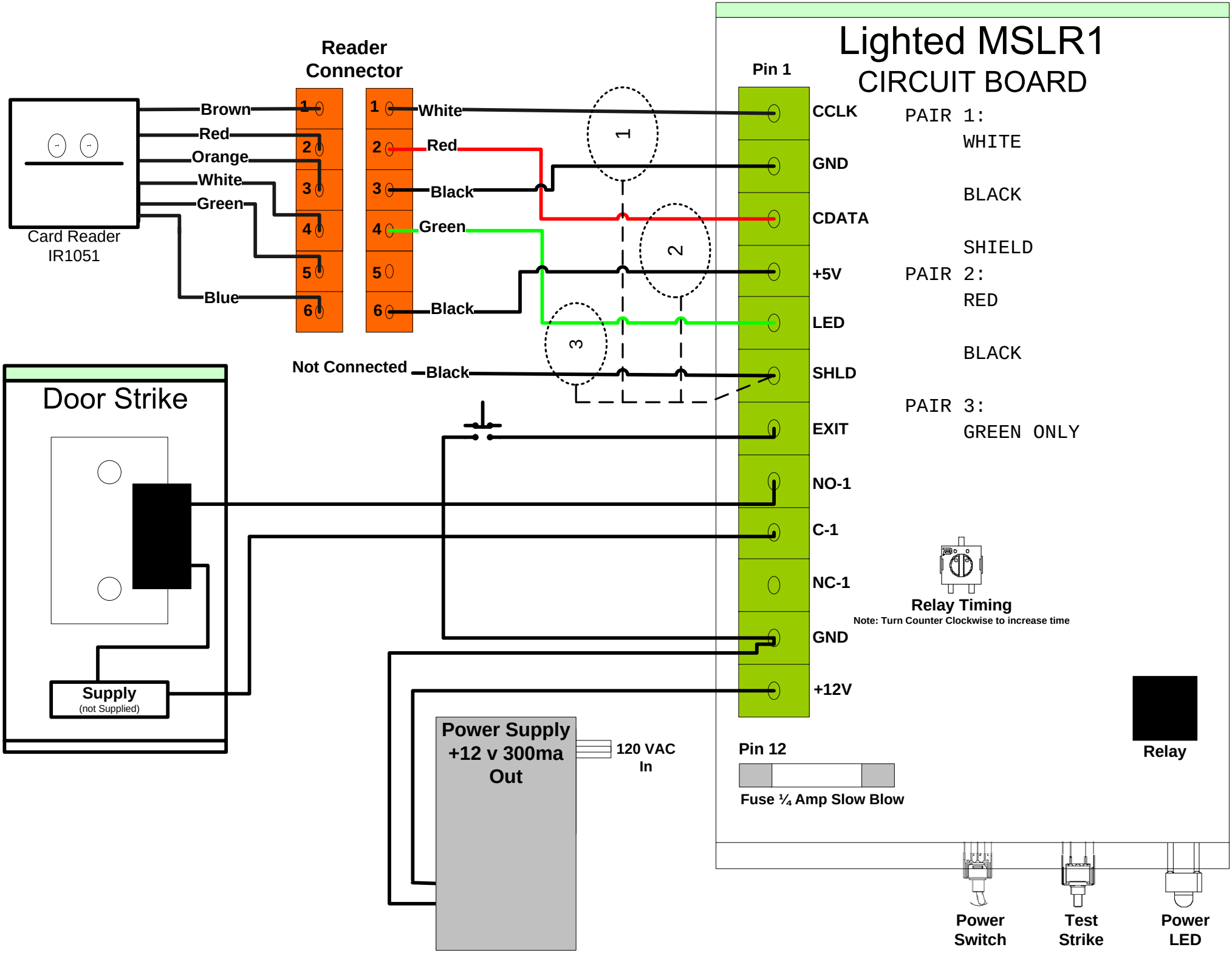
Lighted MSLR1
CIRCUIT BOARD
Reader Connector
Card Reader
IR1051
Brown
Red
Orange
White
Green
Blue
1
2
3
4
5
6
White
Red
Black
Green
Black
Not Connected
Black
Pin 1
CCLK
GND
CDATA
+5V
LED
SHLD
EXIT
NO-1
C-1
NC-1
GND
+12V
PAIR 1:
WHITE
BLACK
SHIELD
PAIR 2:
RED
BLACK
PAIR 3:
GREEN ONLY
Door Strike
Supply
(not Supplied)
Relay Timing
Note: Turn Counter Clockwise to increase time
Power Supply
+12 v 300ma
Out
120 VAC
In
Pin 12
Fuse ¼ Amp Slow Blow
Relay
Power
Switch
Test
Strike
Power
LED

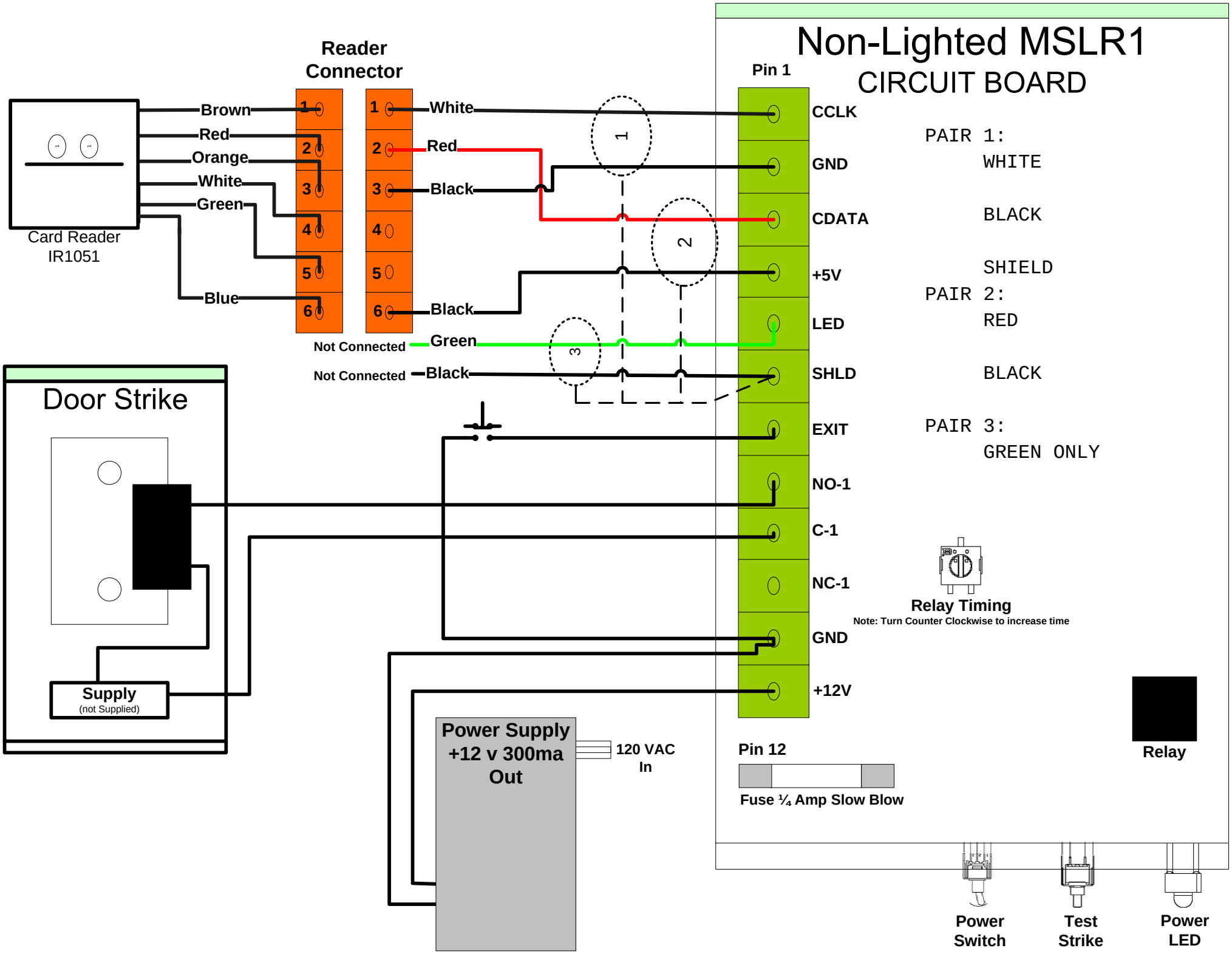
Non-Lighted MSLR1
CIRCUIT BOARD
Reader Connector
Card Reader IR1051
Brown
Red
Orange
White
Green
Blue
1
2
3
4
5
6
White
Red
Black
Black
Green
Black
Not Connected
Not Connected
Pin 1
CCLK
GND
CDATA
+5V
LED
SHLD
EXIT
NO-1
C-1
NC-1
GND
+12V
PAIR 1:
WHITE
BLACK
SHIELD
PAIR 2:
RED
BLACK
PAIR 3:
GREEN ONLY
Door Strike
Supply
(not Supplied)
Power Supply
+12 v 300ma
Out
120 VAC
In
Relay Timing
Note: Turn Counter Clockwise to increase time
Pin 12
Fuse ¼ Amp Slow Blow
Relay
Power Switch
Test Strike
Power LED