SECURITRON®

ASSA ABLOY

Model TSH
Touch Sense Handle
Installation and Operation Instructions

Table of Contents

Description 3
UL 294 Access Control Performance Levels 3
Installing the TSH 3
Remove the Handle 3
Drill the Mounting and Wire Way Holes 4
Mount the Plastic Base to the Door 5
Connect the Electrical Within the Plastic Base 5
Mount the Handle to the Plastic Base 6
Connect the Electrical Wiring and Power Supply 6
Adjust and Test the Sensitivity 8
Test and Use the Redundant (Backup) Switch 10
Install the Plaque 10
Select the Electric Lock 10
Replace the Sensor 11
Operational Security Considerations 11
Troubleshooting 12
MagnaCare® Lifetime Replacement Warranty 14

Description

The Model TSH touch sense handle is an exit device for doors secured by electric locks. It can be employed as a door push or pull and is particularly well suited for aluminum frame glass doors. The assembly consists of a plastic base with an electronic touch sensor mounted inside, and an aluminum handle which is used to pull or push the door open. Touching the handle trips a relay in the sensor, releasing the lock. The relay contacts are double pole with the second pole being optionally employed to shunt either an alarm system or the alarm function of an access control system. The unit's sensitivity is adjustable. In the unlikely event of sensor failure, a push switch is mounted on the plastic base. Depressing the switch has the same effect as activating the sensor by touch and therefore represents built in safety redundancy. The TSH cannot be used outside in rain conditions.

As the TSH is normally used to allow egress on an electrically secured door, make sure that you are complying with applicable building codes for your area. Check with your local building department and/or fire prevention department.

UL 294 Access Control Performance Levels

The following are the UL294 access control performance levels:

- Destructive Attack = Level 1
- Line Security = Level 1
- Endurance = Level IV
- Standby Power = Level 1

Installing the TSH

Remove the Handle

1. UNSCREW the handle from the plastic base (large Phillips screws) to reveal the base mounting holes.
2. SET the handle aside.

Drill the Mounting and Wire Way Holes

NOTE 1: There are two different diameters of holes depending on the door type. Hollow metal doors employ supplied machine screws and "blind nut" fasteners. The second method is to use wood screws (not supplied) on a solid wood door.

NOTE 2: If the TSH is used on a solid door, the door must be core drilled to get the wire way cable to the hinge side for take-off via the supplied door cord.

NOTE 3: The TSH may not be used on a fire-rated door that requires a fire-rated latch (the TSH has no latch).

1. USE the supplied template to set drilling positions for the two mounting holes.
2. For a **hollow metal door**, DRILL two 3/8" [9.5 mm] diameter holes only deep enough to get through the inner side of the door—not completely through the door.

NOTE: The TSH may be mounted with wood screws (not furnished). It is recommended that 1-3/4" #14 wood screws with a hex, pan, oval, or round head be used for mounting.

3. For a **solid wood door**, DRILL two 3/16" (5 mm) diameter holes to a depth of 1-1/4" (32 mm).

NOTE 1: The TSH connects to its power source and to the devices it controls using a six-conductor cable with push-on connector (supplied).

NOTE 2: Exit from the door may be via the supplied door cord, which may be mounted at the top of the door, where it is out of the way, or via any of many commercially available transfer hinges or pivots, which serve to route the wiring off the door in a concealed manner.

NOTE 3: The template for the wire way hole is handed. The TSH can be vertically flipped to suit a right hand or left hand door, but it must be known which way the aluminum handle will face in order to correctly orient the template.

4. DRILL a 3/8" [9.5 mm] diameter hole for the wire way.

Mount the Plastic Base to the Door

1. PERFORM the following to mount the plastic base to a **hollow metal door**.
   a. LOCATE the two supplied blind nuts.
   b. INSERT the nuts with the knurl engaging the edge of each hole.
   c. USE the supplied collapsing tool to collapse the nuts (see Figure 1, “Collapsing the Blind Nuts in a Metal Door”).
   d. PLACE a tooth washer under the head of each screw and MOUNT the plastic base.
   e. TIGHTEN the cap screw, but DO NOT OVERTIGHTEN.

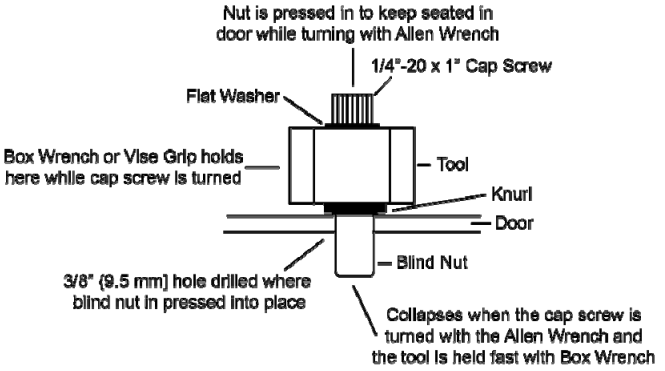

Figure 1. Collapsing the Blind Nuts in a Metal Door

Connect the Electrical Within the Plastic Base

NOTE: Electrical connections with the plastic base must be made before the handle is attached to the base.

1. ROUTE the cable connector across the circuit board and PLUG into the corresponding connector on the board (see Figure 2, “Plastic Base and Handle Detail”).

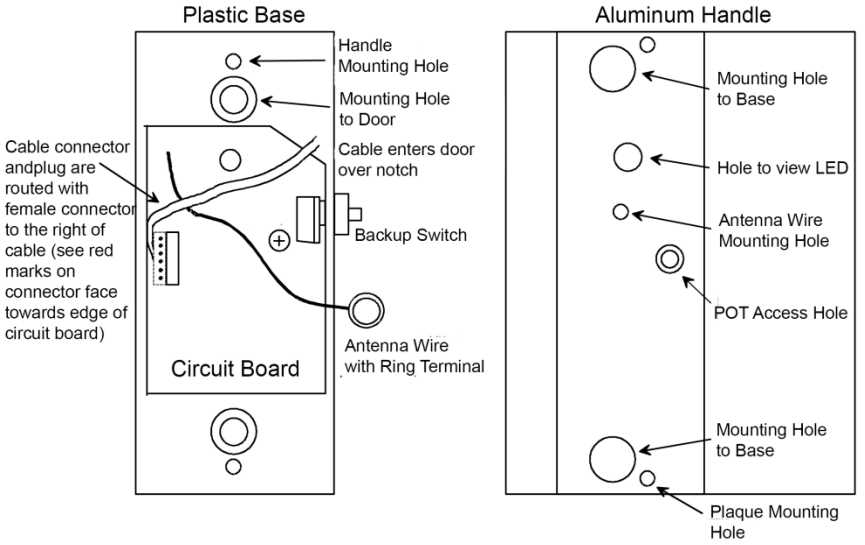

Figure 2. Plastic Base and Handle Detail

Mount the Handle to the Plastic Base

1. INSTALL the handle onto the base using the two large flathead Phillips screws.

Connect the Electrical Wiring and Power Supply

NOTE 1: Figure 3, “TSH Wiring for Fail Safe Electric Lock,” and Figure 4, “TSH Double Break Wiring,” show a generic use of the TSH with any type magnetic lock and power supply.

NOTE 2: When using all Securitron products, the installation is simple. It should be noted that for any Securitron Magnalock, the red wire denotes the "+" input and the black wire denotes the “–“ input. Also, the MOV does not need to be installed with any Securitron Magnalock.

1. CONNECT the electrical wiring in accordance with Table 1, “Sensor Wiring,” and Figures 3 and 4.

Table 1. Sensor Wiring

Wire Color	Connection
Red	"+" DC Power
Black	"–" DC Power
White	Relay Common, Pole 1
Green	Relay Normally Closed, Pole 1
Blue	Relay Common, Pole 2
Orange	Relay Normally Closed, Pole 2

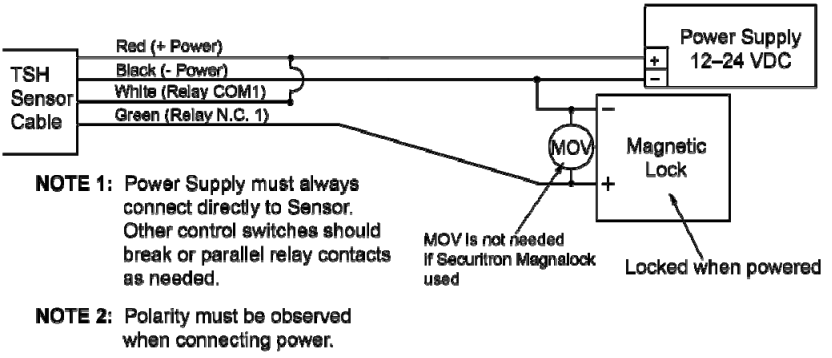

Figure 3. TSH Wiring for Fail Safe Electric Lock

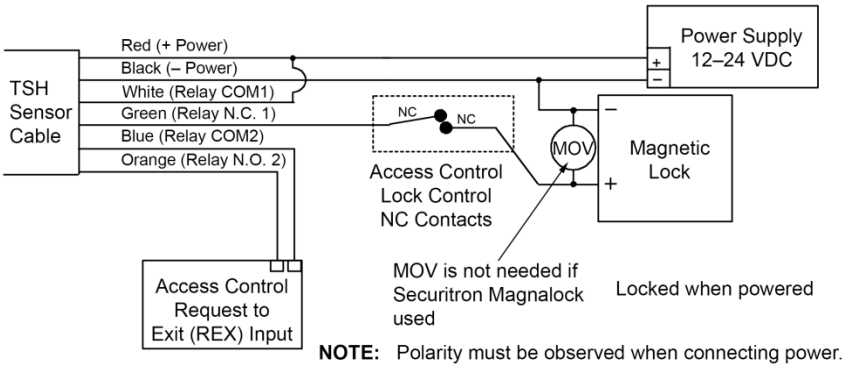

Figure 4. TSH Double Break Wiring

2. CONNECT the power supply outputs to the rest of the system as shown above.

Adjust and Test the Sensitivity

NOTE: The TSH is capable of being operated by a wide variety of power supplies and does not require regulated power. However, a certain class of power supplies called "switching" can sometimes interfere with operation. Switching power supplies can produce line noise which affects the TSH by rendering it hard to adjust.

1. PERFORM the following if the TSH is hard to adjust.
   a. REPLACE the power supply with a linear power supply, if possible.
   b. **IF** not,
   THEN CONNECT one 0.01 mF capacitor between power supply "+" and earth ground, and CONNECT a second 0.01 mF capacitor between power supply "–" and earth ground (see Figure 5, "Connecting Capacitors to a Switching Power Supply."

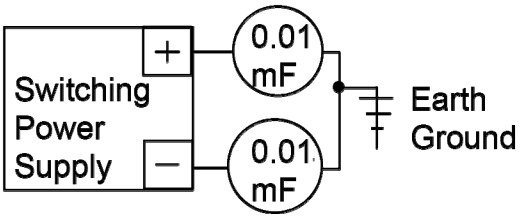

Figure 5. Connecting Capacitors to a Switching Power Supply

2. PERFORM the following test to make sure a problem does not exist after the installation is complete.
   a. TURN UP the sensitivity up to the point just before it is open all the time.

   NOTE: The effect of coupling the reader's energy though a body into the door tends to increase the sensitivity of the TSH.

   b. From the outside of the door, PLACE hand on the reader and LEAN body against the door to see if the TSH can be triggered.

NOTE 1: Securitron has developed a simple filter circuit which will absorb the interference from the reader. This requires a 22 millihenry (mH) inductor (DigiKey Part # M7223-ND, JW Miller Part # 70F222AI). This part can also be purchased at a local electronics parts supply house or directly from Securitron.

NOTE 2: Because the inductor is an insulated part, it can lay in the cavity in the plastic base on top of the circuit board.

c. INSTALL the inductor by identifying the ring terminal with brown wire, which connects the "antenna" screw on the back side of the aluminum handle to the circuit board, clipping this wire, and splicing in the inductor.

3. ADJUST the sensitivity.

NOTE 1: The sensor board has a potentiometer which is accessible through a "pot access hole" from the top of the aluminum handle before the plaque has been installed (see Figure 2). The potentiometer increases sensitivity when turned clockwise and decreases it when turned counterclockwise. An LED on the sensor circuit board, also visible through an access hole in the aluminum handle (see Figure 2), "follows" the sensor. It is <u>on</u> when the sensor is releasing the door.

NOTE 2: In the following step, sensitivity is so high that the unit is <u>on</u> all of the time.

a. ROTATE the potentiometer (POT) clockwise, without touching the TSH, until the LED just turns <u>on</u>.
b. ROTATE the POT slowly counterclockwise until the LED turns <u>off</u>, and then another 15 degrees counterclockwise.
c. EXPERIMENT by touching the handle and observing if the LED comes <u>on</u>.
d. ADJUST the POT, as required.

Test and Use the Redundant (Backup) Switch

NOTE: Pushing the redundant backup button breaks the connection between white (COM1) and green (NC1) wires just the same way as if the TSH was touched, providing a "hard" backup circuit break which releases the controlled fail safe lock.

1. TEST the redundant (backup) switch (red push switch mounted on the side of the plastic base) for functionality in providing backup in case of any malfunction or maladjustment of the sensor.

Install the Plaque

NOTE 1: The two supplied plaques provide the following choices:

- A legend can be selected, either “PULL” or “PUSH”, depending on which way the door swings
- The back side of either plaque can be selected, which will yield a plain finish in either a matching or contrasting color to the color of the handle depending on aesthetic preference

NOTE 2: A choice of colors is provided for the included screws to match the selected plaque color.

1. INSTALL a plastic plaque in the slot in the aluminum handle to cover up the mounting holes and access holes to the circuit board, after the wiring is complete.

Select the Electric Lock

NOTE 1: The TSH allows silent and immediate egress without the mechanical action of traditional exit devices, which require periodic maintenance and replacement.

NOTE 2: Having no moving parts, the TSH possesses an extended operating life.

NOTE 3: The TSH was designed for use with Securitron's Magnalock. The Magnalock secures the door with magnetic force only and therefore has no possibility of jamming and thereby denying egress. The Magnalock also has internal electronics which allow it to release very rapidly. When used with the TSH, which is also a fast device, exit is immediate and the impression a person exiting gets is that the door is not locked at all.

1. SELECT the appropriate electric lock to use with the TSH.

Replace the Sensor

1. REMOVE two screws holding the plaque and SLIDE out the plaque.
2. REMOVE two large flathead Phillips machine screws and carefully REMOVE the aluminum handle from the plastic base.

NOTE: As aluminum handle is removed, it is connected to the base via a ring terminal with brown wire screwed into the handle and soldered into the sensor circuit board.

3. UNSCREW ring terminal from the handle and SET the handle aside.
4. Remove two Phillips machine screws holding the board to the base, and REPLACE the board.
5. SECURE the board to the base using two Phillips machine screws.
6. GET the handle and SCREW the ring terminal to it.
7. ATTACH the aluminum handle to the plastic base using the two large flathead Phillips machine screws.
8. ATTACH the plaque with the two holding screws.

Operational Security Considerations

The TSH provides free egress from the interior protected area, while the electric lock secures against unauthorized entry from outside. It is important to note that persons on the outside cannot activate the interior release device from the outside. This is a common problem with other interior release devices. For instance, if a panic bar with switch is used, it is possible to trip it from the outside if a would-be intruder can introduce a coat hanger in between the door and frame. Aluminum frame glass doors tend to allow this more than other types. Similarly, microwave detectors used on the inside can sometimes be activated from the outside if the door is vibrated strongly. The TSH is more secure with respect to the outside. To ensure this security, the user must be made aware of the following operational characteristics:

1. The sensor functions by setting up an oscillating electric field which conforms along any metal surface that contacts the sensor's antenna wire. In the TSH, it is the handle itself that carries this field. The electric field is disturbed by the near proximity of ionization from within the body, which forms a conductive mass. It is this mass that the sensor detects. As a proximity device, the handle is sensitive to the closeness of the mass. For example, if a person wearing gloves touches the handle with a finger tip, the door will generally not release. However, if a gloved hand is wrapped around the handle in normal use, the door will release because the conductive mass of the hand is in much closer contact with the handle.

2. The main security concern regarding outside entry is if a person could introduce a metal wire from the outside and make metal to metal contact with the handle. The field could then propagate along the wire and be activated by the intruder's hand. In practice, this is unlikely. The handle is anodized and therefore insulated, so it will not make contact with the wire. The intruder would have to scratch away the anodization, which requires both effort and knowledge. Additionally, the field propagates weakly along a thin wire. If, however, high security from the outside is critical in the application, the sensitivity of the TSH should be set as low as satisfies the exit performance requirements.

Troubleshooting

The door will not release when the handle is touched

1. TEST the operation of the TSH.
   a. LISTEN to hear the relay click when the TSH is touched.
   b. Alternately, REMOVE the plaque and MONITOR the LED which comes on when the TSH senses touch.
   c. **IF** a click is not heard,
      OR the LED does not come on,
      THEN TRY the backup switch.

   NOTE: A door that does not release from a touch of the TSH and from a push on the backup switch shows that there is most likely a fault in the overall installation wiring.

   d. **IF** the door does not open after pushing the backup switch,
      THEN CHECK the wiring to ensure it is correct,
      AND RETEST.

   NOTE: A door that does not release from a touch of the TSH, but does release from pushing the backup switch, shows that the general wiring is correct, but the sensor is not reading a touch.

   e. ADJUST the sensitivity of the TSH—it may be set too low.
   f. **IF** the above step does not solve the problem,
      THEN the fault could be that the sensor itself is not receiving 12–24 VDC power on the red and black wires,
      AND CHECK the power supply wiring,
      AND ENSURE the input polarity is correct,
      AND CHECK the connector block that plugs into the sensor card for loose wires,
      AND RETEST.

g. **IF** the above step does not solve the problem,
THEN ENSURE that the ring terminal that connects the sensor to the handle itself has not come loose.
h. CALL the factory if any of the above does not solve the problem, because the defect appears to be in the relay contacts and the sensor will have to be replaced.

The door remains released constantly

NOTE: The LED that comes on when the TSH senses a touch is most easily monitored if the plaque is removed.

1. **IF** a click is heard when the handle is touched,
AND the lock remains released,
THEN REVIEW the wiring to be sure the sensor is correctly applied in the circuit,
AND CORRECT, as necessary,
AND RETEST.
2. **IF** the LED is on constantly,
OR a click is not heard when the TSH is touched,
THEN ADJUST the sensitivity of the sensor (probably adjusted too high) by rotating the adjustment pot counterclockwise while not touching the handle,
AND RETEST.
3. **IF** the above steps do not solve the problem,
AND the lock remains released,
THEN ENSURE there is no "foreign object" creating a conductive path from the TSH to the door (e.g., metal blinds, water leak),
AND CORRECT, as necessary,
AND RETEST.

NOTE: Certain large electronic noise sources can "swamp" the sensor although this is rare. Examples would include large radio or radar transmitters in the building or a high voltage neon sign mounted within a few feet of the door.

4. **IF** a noise induced problem is suspected,
THEN CALL the factory for assistance.

NOTE: In very rare instances, the sensor can “hang up” in a condition that continuously releases the door.

5. **IF** the sensor is in a “hang up” condition,
   THEN TURN OFF the power to the unit,
   AND TURN the adjustment pot all the way counterclockwise,
   AND TURN ON the power to the unit,
   AND VERIFY that the door locks,
   AND RE-ADJUST the sensor potentiometer normally.

MagnaCare® Warranty

LIFETIME - NO FAULT – TOMORROW

- Lifetime - We guarantee our products, and since we've been making Magnalocks for over 35 years that’s a promise you can trust
- No Fault - for any reason, including but not limited to installation error, vandalism or act of God
- Tomorrow - replacement product is shipped at Securitron's expense, next day air if needed
- Hassle Free - No product registration is required

SECURITRON MAGNALOCK CORPORATION warrants that it will replace at customer’s request, at any time for any reason, products manufactured and branded by SECURITRON since January 1, 1999. SECURITRON will use its best efforts to ship a replacement product by next day air freight at no cost to the customer within 24 hours of SECURITRON’s receipt of the product from customer. If the customer has an account with SECURITRON or a valid credit card, the customer may order an advance replacement product, whereby SECURITRON will charge the customer’s account for the price of the product plus next day air freight, and will credit back to the customer the full amount of the charge, including outbound freight, upon SECURITRON’s receipt of the original product from the customer. SECURITRON’s sole and exclusive liability, and customer’s sole remedy, is limited to the replacement of the SECURITRON product when delivered to SECURITRON’s facility (freight and insurance charges prepaid by customer). The replacement, at SECURITRON’s sole option, may be the identical item or a newer unit which serves as a functional replacement. In the event that the product type has become obsolete in SECURITRON’s product line, this MAGNACARE warranty will not apply. This MAGNACARE warranty also does not apply to custom, built to order, or non-catalog items, items made by others (such as batteries), returns for payment, distributor stock reductions, returns seeking replacement with anything other than the

identical product, or products installed outside of the United States or Canada. This MAGNACARE warranty also does not apply to removal or installation costs. SECURITRON will not be liable to the purchaser, the customer or anyone else for incidental or consequential damages arising from any defect in, or malfunction of, its products. SECURITRON does not assume any responsibility for damage or injury to person or property due to improper care, storage, handling, abuse, misuse, or an act of God. EXCEPT AS STATED ABOVE, SECURITRON MAKES NO WARRANTIES, EITHER EXPRESS OR IMPLIED, AS TO ANY MATTER WHATSOEVER, INCLUDING WITHOUT LIMITATION THE CONDITION OF ITS PRODUCTS, THEIR MERCHANTABILITY OR FITNESS FOR ANY PARTICULAR PURPOSE.

Securitron
10027 S. 51st St. Ste 102
Phoenix, AZ 85044
1.800.MAGLOCK
1-800-624-5625
Mon-Fri: 6:00am - 4:00pm PDT
www.securitron.com

SECURITRON®

ASSA ABLOY

ASSA ABLOY is the global leader in door opening solutions, dedicated to satisfying end-user needs for security, safety and convenience

© 2015, Hanchett Entry Systems, Inc., an ASSA ABLOY Group Company.