SERIES 09

GLASS DOOR STRIKE, 1/2" GLASS

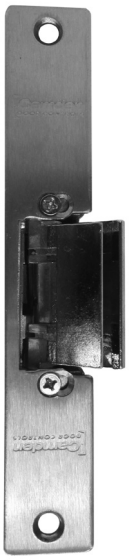

CX-EL0955

FEATURES

- 12V DC AND 24V DC MODELS
- FAIL SECURE AND FAIL SAFE MODELS
- INSTALL AT TOP OR SIDE OF DOOR FRAME
- FULLY REVERSIBLE FOR RIGHT OR LEFT HAND DOORS
- CONTINUOUS DUTY OPERATION
- 5 YEAR WARRANTY

DESCRIPTION

Camden 09 Series electric strikes for glass doors are designed for use on single swing glass doors, 1/2" (12.7mm) thick. There are 12V DC and 24V DC fail secure and fail safe models. All glass door strikes are reversible for left and right handed doors and can be installed at the top or side of the door.

DIMENSIONS

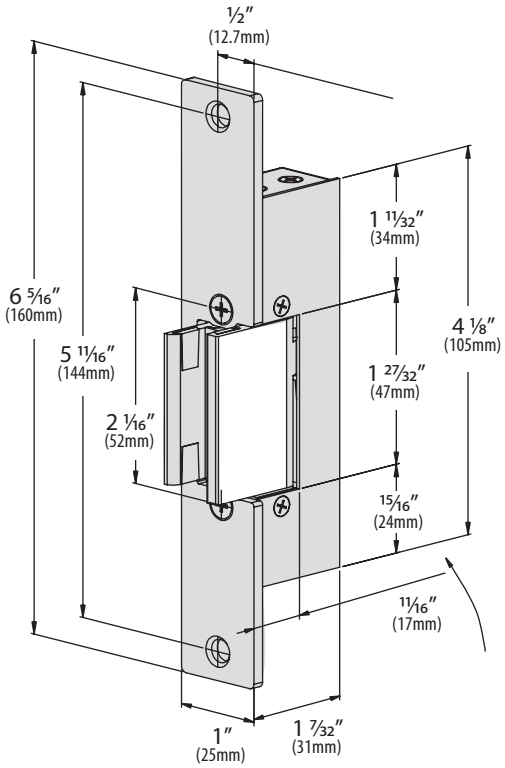

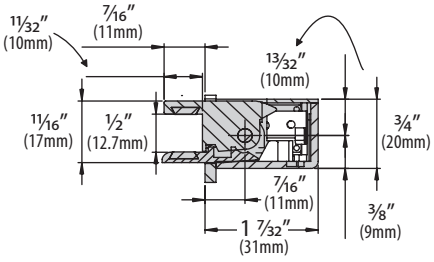

Operation Detail

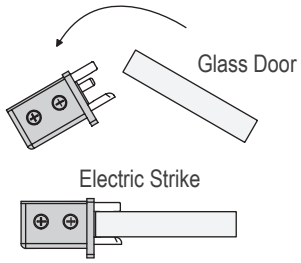

SPECIFICATIONS

VOLTAGE:	12V DC OR 24V DC
STATIC STRENGTH:	561 LBS. (254 KG.)
ENDURANCE:	200,000 CYCLES
DUTY:	CONTINUOUS DUTY OPERATION
STABILIZED DC CURRENT CONSUMPTION:	**CX-EL0955:** 180mA **CX-EL0958:** 180mA **CX-EU0955:** 150mA **CX-EU0958:** 120mA
CONTINUOUSLY OPERATING VOLTAGE RANGE IN V DC:	**CX-EL/EU0955:** 11-12 V **CX-EL/EU0958:** 23-24 V
OPERATING TEMP RANGE:	5°F TO 104°F (-15°C TO 40°C)
DIMENSIONS:	4 1/8"H x 3/4"W x 1 7/32"D (105mm x 20mm x 31mm)

ORDERING INFORMATION

CX-EL0955:	ELECTRIC STRIKE FOR GLASS DOORS, 12 VDC, FAIL SECURE
CX-EL0958:	ELECTRIC STRIKE FOR GLASS DOORS, 24 VDC, FAIL SECURE
CX-EU0955:	ELECTRIC STRIKE FOR GLASS DOORS, 12 VDC, FAIL SAFE
CX-EU0958:	ELECTRIC STRIKE FOR GLASS DOORS, 24 VDC, FAIL SAFE