Securitron EcoPower Power Supply

Efficient power supply for low-power locks

ASSA ABLOY

The global leader in door opening solutions





Reduce power supply standby power consumption to only 8.5mW, a 99% decrease compared to current linear and switching power supplies, with the Securitron EcoPower.

Features & Benefits

- Included battery provides up to 24 hours of backup while built-in battery end-of-life notification system ensures uninterrupted service
- Low power draws allow for longerwire runs of thinner wire for lower cost of installation
- Covered by MagnaCare® lifetime replacement, no fault, no questions asked warranty

Energy Efficient

- Achieve 99% energy savings with EcoPower compared to current switching power supplies
- Extremely low power consumption with only 8.5mW standby power consumption with a 115V input
- Microprocessor control eliminates power consuming relays

Ease of Installation

- Multiple mounting options include surface mounted, recessed into drywall or installation on an existing UL listed double gang junction box
- Supports fail safe and fail secure lock configurations
- Aesthetic design allows for convenient installation near the lock

LIFE
MagnaCare Warranty

Battery Backup

Energy Efficient | Reliable | Flexible

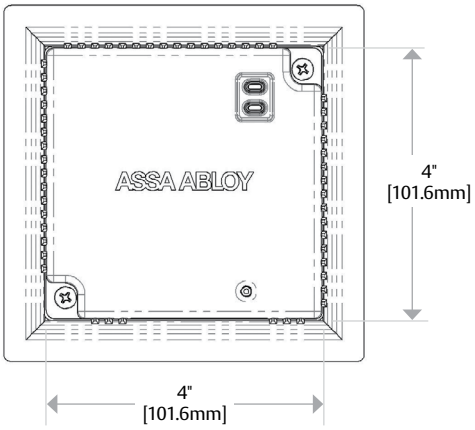

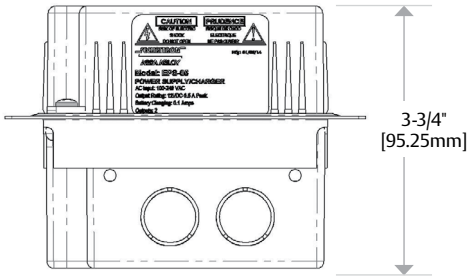

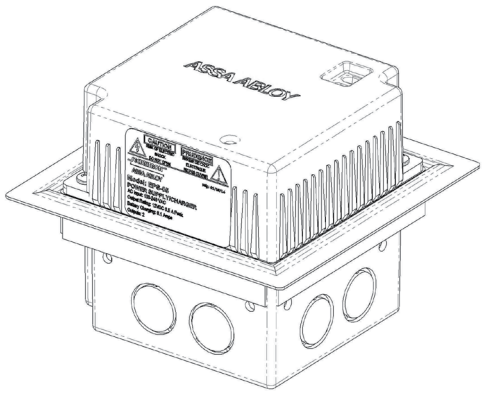

Specifications

Certifications

- UL 294 (6th Edition) listed
- UL 603 Listed
- ULC S533 Listed
- CE Certified
  - EN 60950-1:2006 + A11:2009 + A1:2010 + A12:2011 + A2:2013
  - EN 55022: 2010
  - EN 55024: 2010
  - EN61000-3-2: 2014
  - EN61000-3-3: 2013
- RoHS Compliant
- REACH Compliant
- Environmental Product Declaration

Electrical

- **Input voltage:** 100-240V
- **Output voltage:** 12V-14V
- **Standby power:** <10mW at 115V, <20mW at 230V
- **Output current:** 0.5A peak, 0.1A continuous
- Includes one (1) 800 mAh sealed AGM lead acid battery*

Operating Temperature

- -4˚ to 122˚F [-20˚ to 50˚C]

Shipping Weight

- 1.7 lbs [0.77kg]

** Battery not covered under MagnaCare® warranty.*

Features

Standard Features

- Extremely low power consumption, only 8.5mW standby power consumption with a 115V input
- Included battery provides 24 hours of backup or more
- Universal input voltage capabilities (100-240 VAC)
- Multiple mounting options
  - Surface mounted
  - Recessed into drywall
  - Use either the factory box or an existing UL Listed double gang junction box
- Low power draws allow for longer wire runs of thinner wire for lower cost of installation
- Fire alarm input dry contact (NO or NC)
- Access control input dry contact (NO or NC)
- Supports fail secure and fail safe lock configurations
- LED troubleshooting
- Built in battery end-of-life notification system
- MagnaCare® lifetime replacement, no-fault, no questions asked warranty

How to Order

Model Series	Output Power	Option (s)
EPS	– 05	B
EPS	**05** 0.5 Amps	**(blank)** PS, Enclosure, Battery
		B Circuit Board Only

ELECTRONIC SECURITY HARDWARE
HES | Securitron
assaabloyesh.com | **800.626.7590** | 10027 S. 51st Street, Ste. 102 Phoenix, AZ 85044 USA

Patent pending and/or patent www.assaabloydss.com/patents
Copyright © 2018, Hanchett Entry Systems, Inc., an ASSA ABLOY Group company. All rights reserved. Reproduction in whole or in part without the express written permission of Hanchett Entry Systems, Inc. is prohibited.