NOTE : Accurate door preparation is essential for proper functioning of this lock. Follow template and instructions carefully.

THRU- BOLTS ARE PROVIDED AND RECOMMENDED FOR USE ESPECIALLY ON HIGH TRAFFIC DOORS. THERE ARE THREE THRU-BOLT LOCATION OPTIONS

The lever anti-sagging mechanism within the lock chassis has a patent in theU.S and other countries.

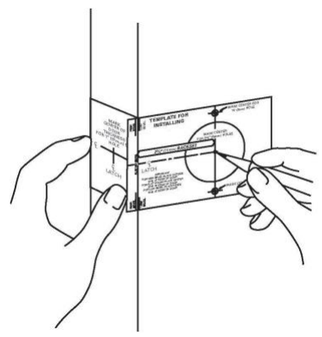

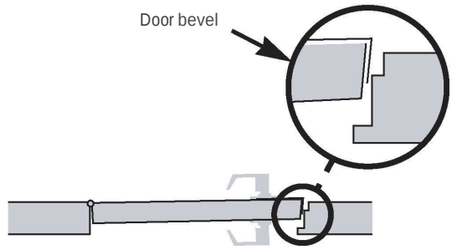

1. Mark door

A. Check lock for proper backset and thru-bolt locations before marking door.
B. Detach "Door edge" Template from main template Card
C. Fold main template on the desired line (Low,Flat, or High bevel line).
D. Position template at the desired height from floor (Recommended height from floor is 38" (97cm)).
E. Mark center for $2^{1}/_{8}$"(54mm) hole.
F. Mark centers for (2)$^{5}i_{16}$"(8mm) holes if thru-bolt are being used.
G. Use "Door Edge" Template to mark $^{7}/_{8}$" or 1" hole for latch bolt.

2. Drill holes

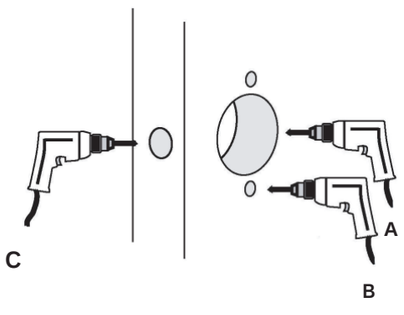

A. Drill a $2^{1}/_{8}$"(54mm) hole through door (from both sides to avoid damaging door).
B. Drill (2) $^{5}/_{16}$" (8mm) holes for thru- bolt(if used)
C. Drill a 1" (25mm) or $^{7}/_{8}$" (22mm) (depending on latch housing diameter) in door edge.

3. Install latch

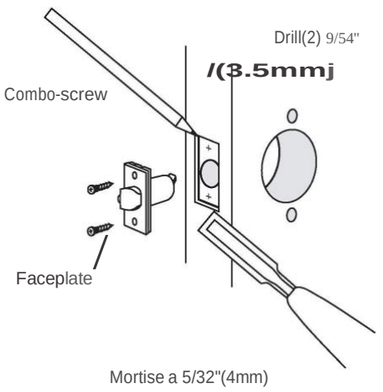

A. Insert latch into hole.Trace around faceplate
B. Chisel out wood until faceplate fits flat with door edge.
C. Drill (2) %{(3.5mm) holes and secure latch unit with combo-screws supplied.
D. Fasten latch to door so that beveled side of latchbolt faces jamb.

4. Install strike

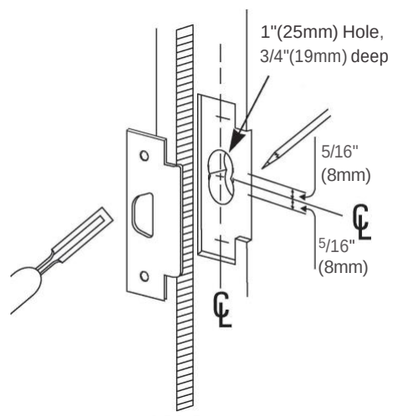

ASA Strike

A. Mark vertical line and heightline on jamb exactly opposite center of latch hole.
B. Drill (2) 1" (25mm) holes, 3/{ (19mm) deep, $^{5}/_{16}$" (8mm) above and below heightline.
C. Use strike plate as pattern for cutout. Clean out hole and install strike.

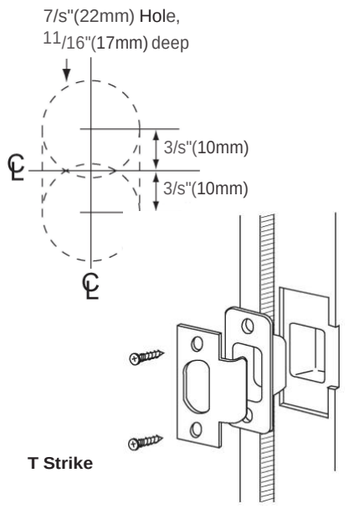

T Strike

A. Mark vertical line and heightline on jamb exactly opposite center of latch hole.
B. Drill (2) $^{7}/_{8}$• (22mm) holes, $^{11}/_{16}$" (17mm) deep, 3/s" (10mm) above and below heightline.
C. Use strike plate as pattern for cutout. Clean out hole and install strike.

Must use M6x8.5mm screws If not using thru-bolts.
Must use #10-32x 1-$^{1}/_{8}$• screws if using thru-bolts.

5. Disassemble inside trim

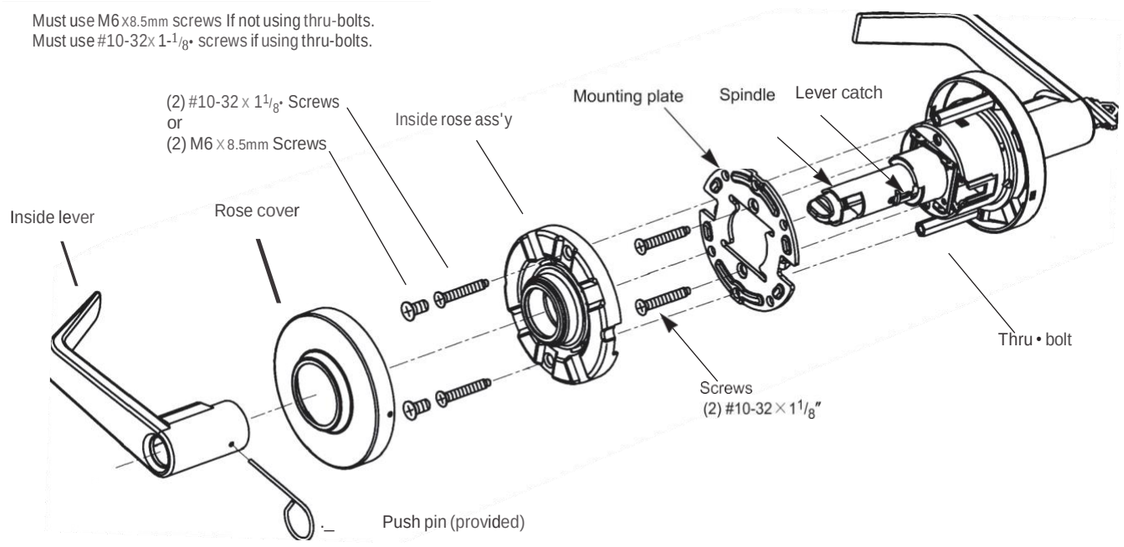

A. Remove inside lever.
B. Remove inside rose assembly.
C. Remove mounting plate.
D. RemoveThru-bolts if desired (not recommended).

6. Adjust for door thickness

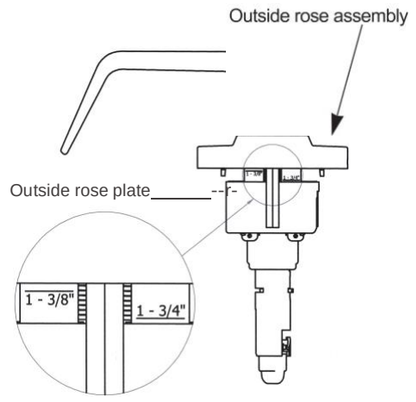

A. Lock can be adjusted for door thickness range for 13/a" to 13/4"

B. Rotate outside rose assembly until correct door thickness mark in aligned with the outside rose plate.

7. Install lock unit

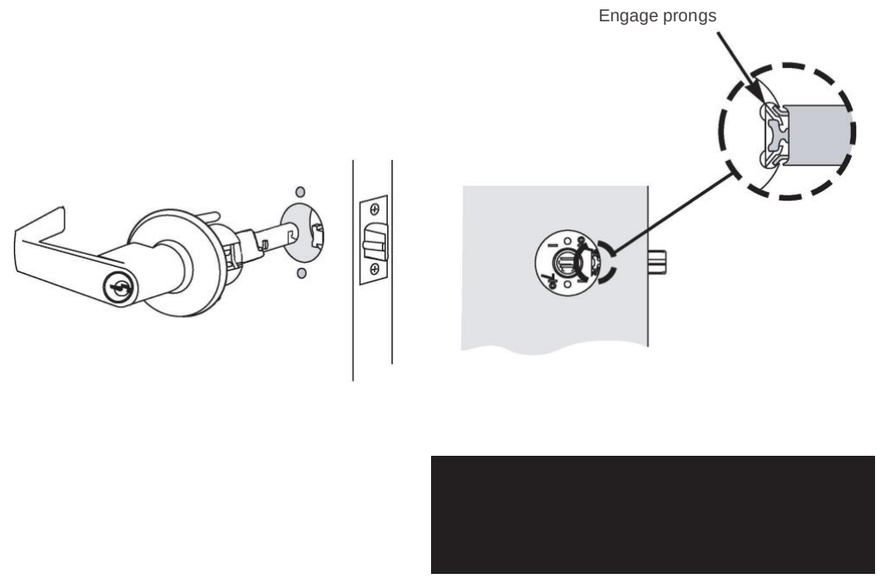

IMPORTANT: This lock is factory preset for 13// (45mm) doors.
See Step 6. to center chassis in door or to change adjustment for other door thicknesses

8. Install mounting plate.

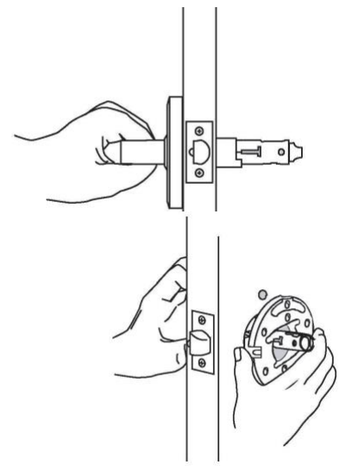

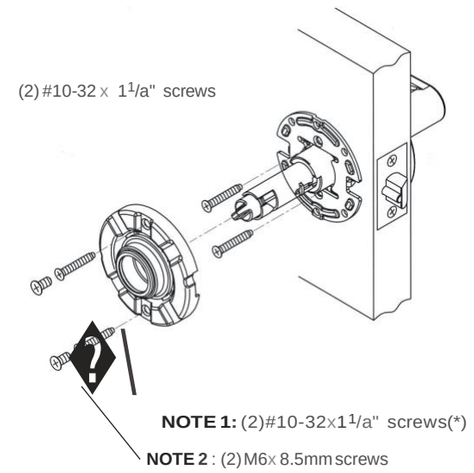

CAUTION : When using a power screwdriver for installation, set to minimum torque setting.

A. Hold Lock in place in the door.

B. Put mounting plate into position on chassis.

C. Place mounting plate. Tighten it to lock body with (2) #10- 32x 1 1/8" screws

D. Place inside rose ass'y. Tighten it to lock body with screws supplied.

NOTE 1 : (2) #10 - 32 x 1 1/a"(*) screws can be used for outside thru - bolt type only.

NOTE 2 : (2) M6 X 8.5mm screws can be used for no thru - bolt type only.

9. Install inside rose assembly

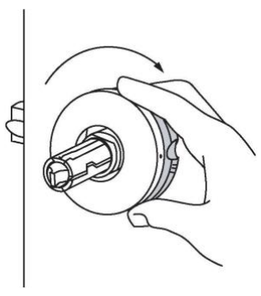

A. Align dimples on rose with grooves in inside rose assembly.

B. Place rose against door and rotate clockwise until dimples snap into slots next to the grooves.

10. Install inside lever

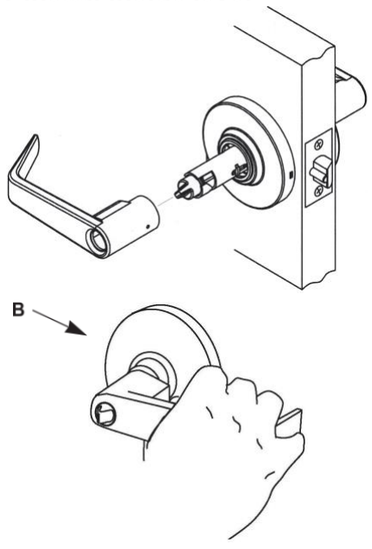

A. Slide inside lever onto spindle. Push lever completely into place. (Pull on lever to make sure that catch is fully engaged.)

B. Test operation of lock to make sure you have followed instructions correctly.

11. Remove outside lever

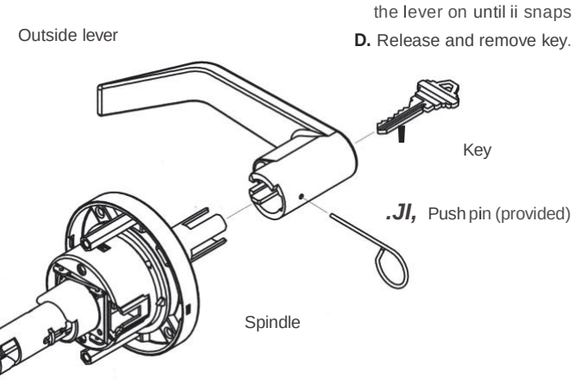

A. Insert key into cylinder. Insert push pin (or similar tool) into hole in lever. Turn key one - quarter turn and push tool (push pin) to depress lever catch. Slide the lever from spindle.

12. Reassemble outside lever

A. Put the cylinder into the outside lever. Then insert the key into the cylinder.

B. Slide lever onto the outside spindle until the cylinder tailpiece engages into the slot inside the spindle.

C. Turn the key a quarter turn and hold in that position. At the same time depress the lever catch and push the lever on until ii snaps into place.

D. Release and remove key.

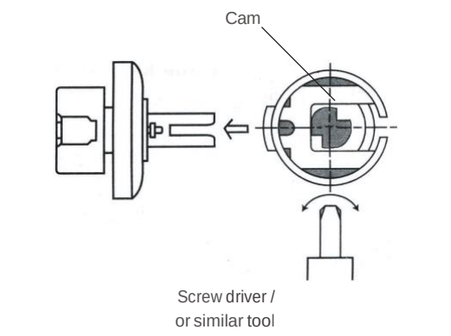

IMPORTANT: Turn cam anti-clockwise as far as it will go before installing outside lever and cylinder