RGB100

Guide Bushing Assembly

(Fits most routers)

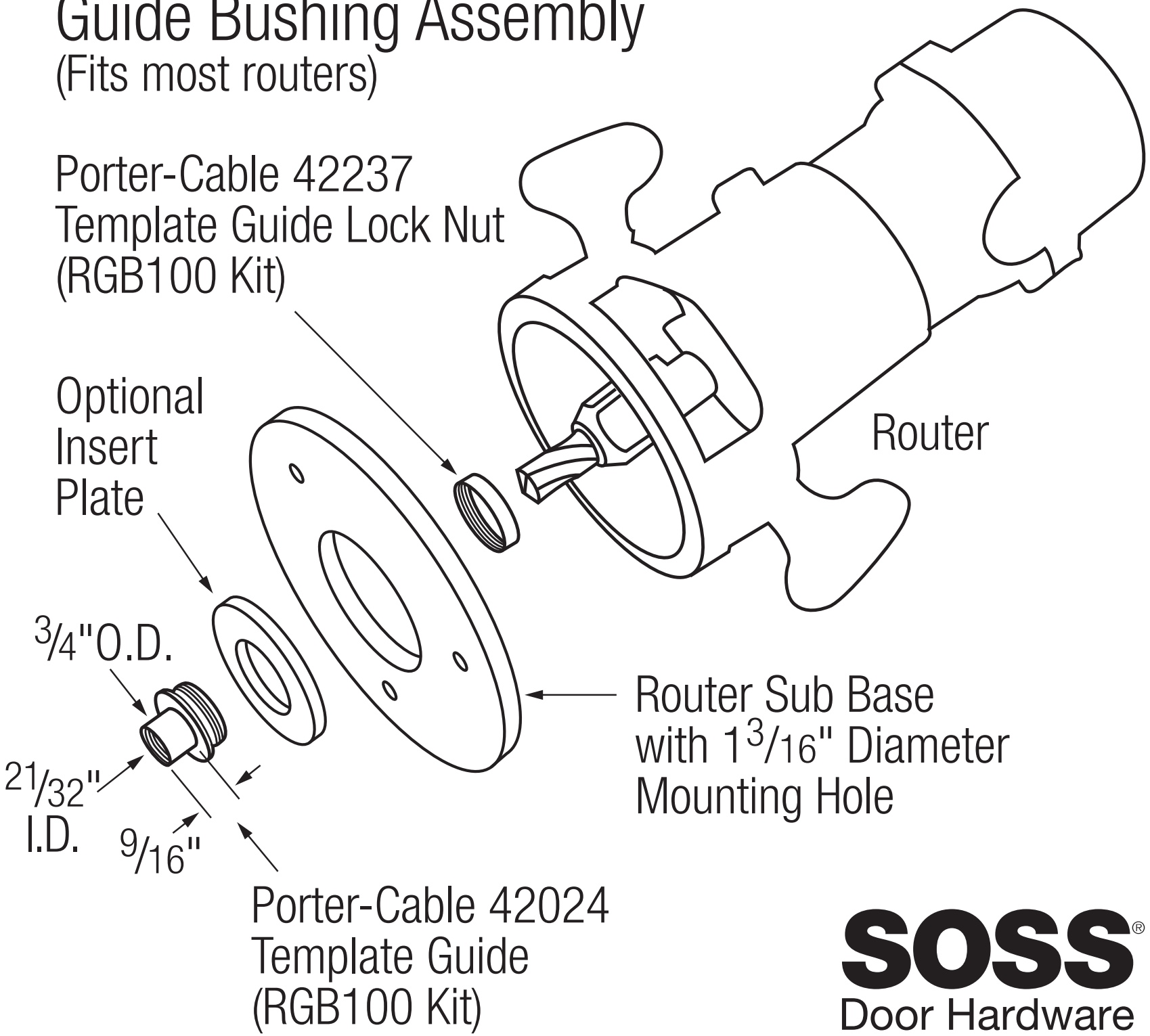

SOSS®
Door Hardware