Invisible Closer Hinge

The SOSS Invisible Closer gives you a closer that is totally invisible from either side when the door is closed. When the door is open, you see only the hinge face and links.

The closure rate is completely adjustable with an Allen wrench after installation. Installation can be either inside the door itself or inside the door jamb. The SOSS Invisible Closer is ideally suited for all types of doors 1-1/8" thick or more. Recommended spacing is one half of the distance from the center of the door to the center of the top hinge.

The Underwriters Laboratories labeled 416IC, 416SSIC, 418IC, 418SSIC, 220ASIC, and 220SSIC SOSS Invisible Closer hinges can be used on hollow metal, sheet metal, tin clad, and steel composite swinging type fire doors and frames rated up to and including three hours. They can also be used on wood core doors and frames rated up to 20 minutes.

Additionally, they can be used on wood/plastic composite doors constructed with Georgia Pacific FSI or FSII banding for a rating up to and including 90 minutes.

The Underwriters Laboratories labeled 420IC and 420SSIC SOSS Invisible Closer Hinges can be used on hollow metal, sheet metal, tin clad, and steel composite swinging type fire doors and frames rated up to and including three hours. Additionally, they can be used on wood core doors and frames rated up to 20 minutes.

The Underwriters Laboratories labeled 216IC, 218IC, and 220IC SOSS Invisible Closer hinges can be used on hollow metal, sheet metal, tin clad, steel composite or wood core swinging type fire doors and frames with 20 minute ratings.

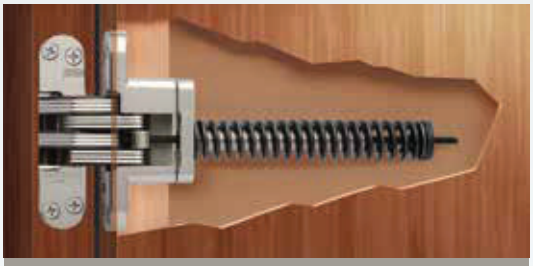

WORKS IN SOLID AND HOLLOW CORE DOORS

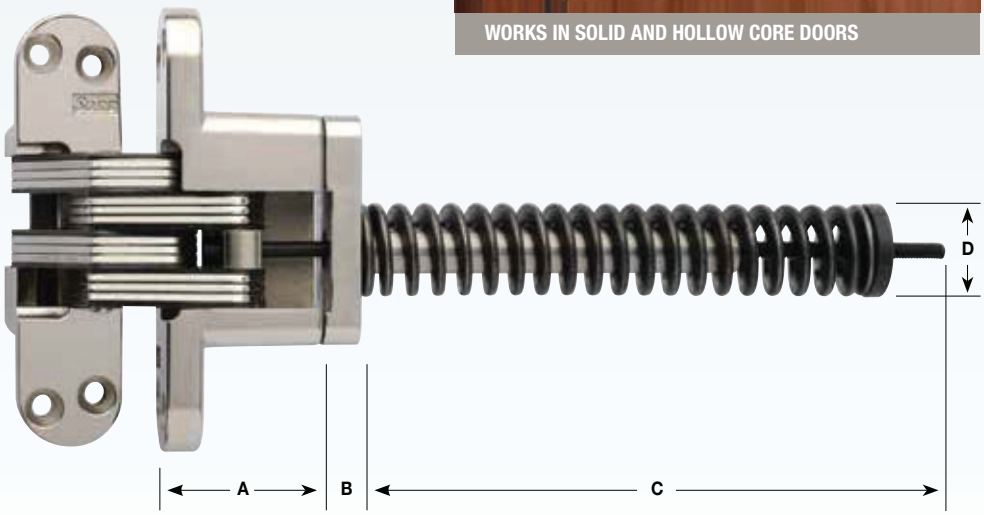

Door Thickness	Closer Model #	Description	A	B	C	D
1⅛"	212IC	Non-fire rated closer for wood or metal	1³¹⁄₆₄"	⅜"	5¹¹⁄₃₂"	½"
1⅜"	216IC	20 minute fire-rated closer for wood or metal	1¹⁵⁄₃₂"	⅜"	6⁵⁄₁₆"	¾"
1⅜"	416IC/416SSIC	3 hour fire-rated closer for metal, 90 minute for wood/plastic composite, 20 minute for wood	1¹⁵⁄₃₂"	⅜"	6⁵⁄₁₆"	¾"
1¾"	218IC	20 minute fire-rated closer for wood or metal	1⁴¹⁄₆₄"	⅜"	7"	1"
1¾"	418IC/418SSIC	3 hour fire-rated closer for metal, 90 minute for wood/plastic composite, 20 minute for wood	1⁴¹⁄₆₄"	⅜"	7"	1"
2"	220IC	20 minute fire-rated closer for wood or metal	1⁶³⁄₆₄"	⅜"	6⅞"	1"
2"	220ASIC/220SSIC	3 hour fire-rated closer for metal, 90 minute for wood/plastic composite, 20 minute for wood	1⁶³⁄₆₄"	⅜"	6⅞"	1"
2"	420IC/420SSIC	3 hour fire-rated closer for metal	1³¹⁄₃₂"	⅜"	6⁵⁷⁄₆₄"	1"

Use at least one fire-rated hinge for every 20" of door height or portion thereof. Fire-rated closer hinges can take the place of a standard fire-rated hinge. At least one fire-rated closer hinge must be used for every 55 lbs. of door weight. One 212IC is needed for every 28 lbs. of door weight or portion thereof.