MORTISE LOCK
INSTALLATION INSTRUCTIONS

INSPIRE™ ROSELESS DESIGNER TRIM

FM 340
Rev. 2/11

MUSEO®

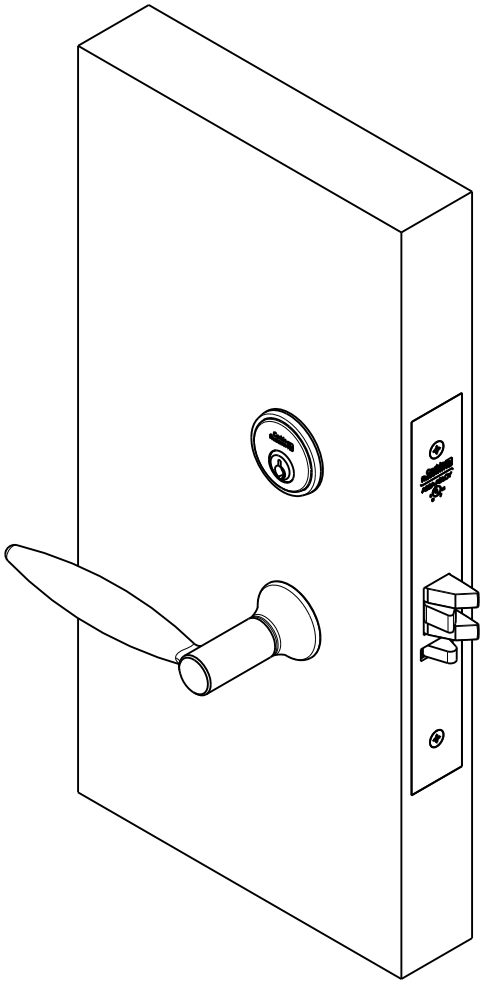

MUSEO®

ASSA ABLOY, the global leader in door opening solutions

Copyright © 2011 Corbin Russwin, Inc., an ASSA ABLOY Group company. All rights reserved. Reproduction in whole or in part without the express written permission of Corbin Russwin, Inc. is prohibited.

TABLE OF CONTENTS:

DOOR PREPARATION 1

ML2000 LOCK HANDING 2

FULL WORKING TRIM (STD) 3

HALF WORKING TRIM (M30) 6

FULL DUMMY TRIM (ML2070) 8

HALF DUMMY TRIM (ML2050) 9

CYLINDER / TURN-PIECE 10

LOCK HANDING IS CRITICAL TO ENSURE LOCK FUNCTIONS PROPERLY

Copyright © 2011 Corbin Russwin, Inc., an ASSA ABLOY Group company. All rights reserved. Reproduction in whole or in part without the express written permission of Corbin Russwin, Inc. is prohibited.

DOOR PREPARATION:

	TEMPLATE
FULL WORKING TRIM:	T31183
HALF WORKING TRIM:	T31184
FULL DUMMY TRIM:	T31186
HALF DUMMY TRIM:	T31187

ALL TEMPLATES CAN BE FOUND AT
WWW.CORBINRUSSWIN.COM/Library/Templates

Copyright © 2011 Corbin Russwin, Inc., an ASSA ABLOY Group company. All rights reserved. Reproduction in whole or in part without the express written permission of Corbin Russwin, Inc. is prohibited.

Mortise Lock Handing Instructions

Step 1) Move the Red locking screw to side of lock-body being locked (Fig. 1)

Step 2) Push in latch then depress catch plate with screw driver (Fig. 1)

Step 3) Pull latch out of lock-body and turn latch over (Fig. 2)

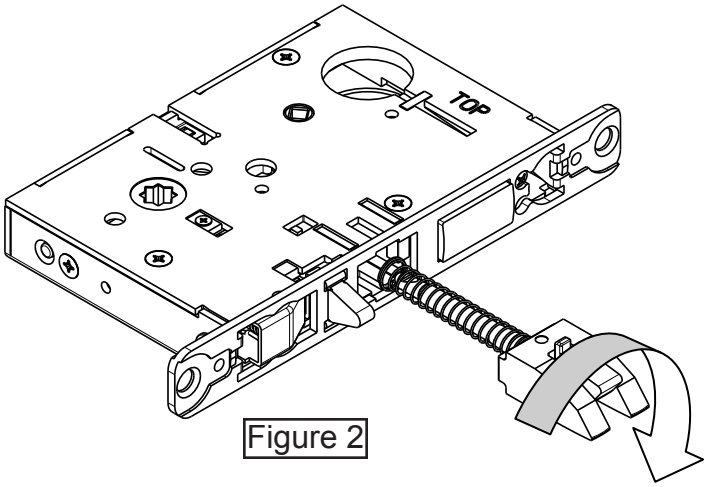

Figure 2

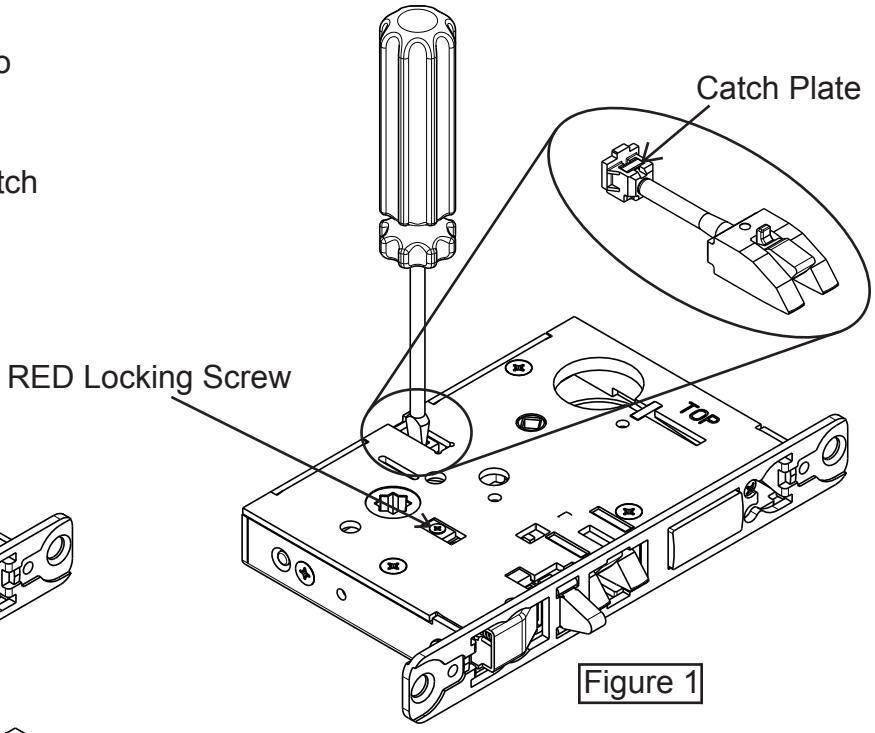

Figure 1

Step 4) Push in latch while holding screw driver behind latch tail (Fig. 3)

Note: Push in latch until catch plate is no longer depressed (Fig. 4)

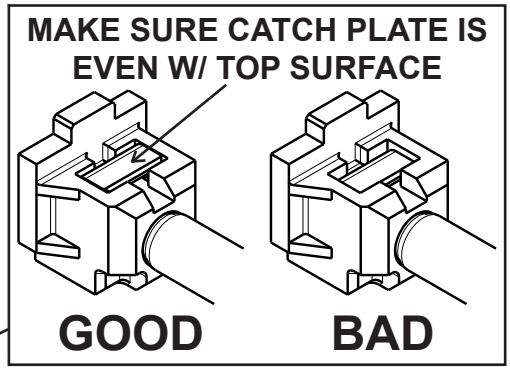

Figure 4

Step 5) Rotate lock front to match bevel of door as shown (Fig. 5)

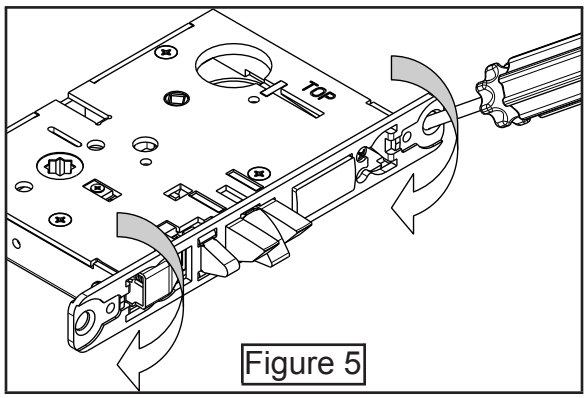

Figure 5

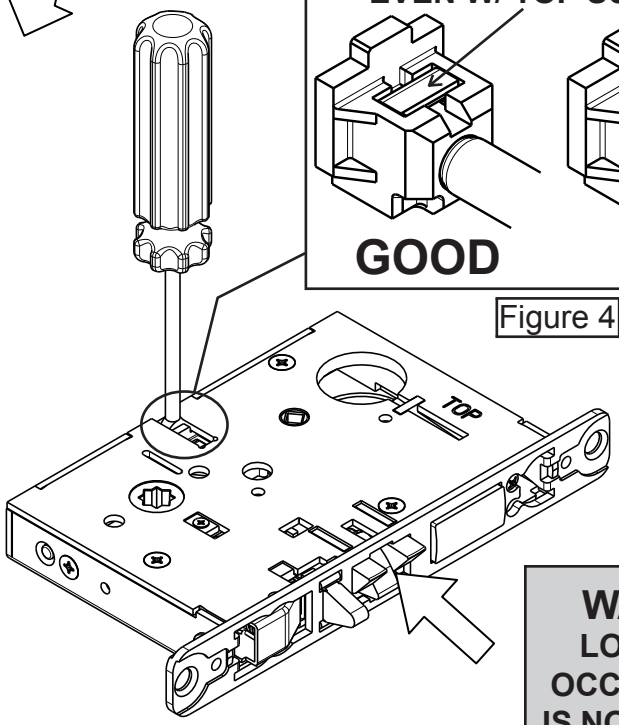

Figure 3

WARNING:
LOCK-IN CAN OCCUR IF LATCH IS NOT PROPERLY INSTALLED

Copyright © 2011 Corbin Russwin, Inc., an ASSA ABLOY Group company. All rights reserved. Reproduction in whole or in part without the express written permission of Corbin Russwin, Inc. is prohibited.

FULL TRIM (STD) INSTALLATION

Step 1) Install strike with shorter 3/4" mounting screws

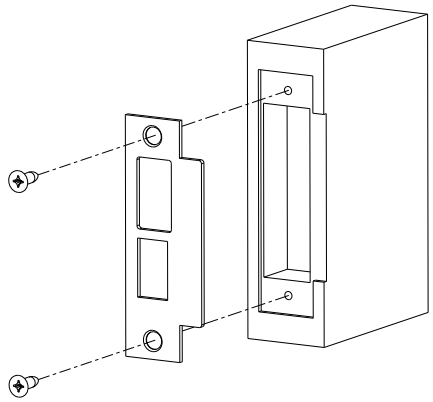

Step 2) Insert mortise lock into door and hand tighten longer 1" mounting screws

MAKE SURE LOCK IS UNLOCKED

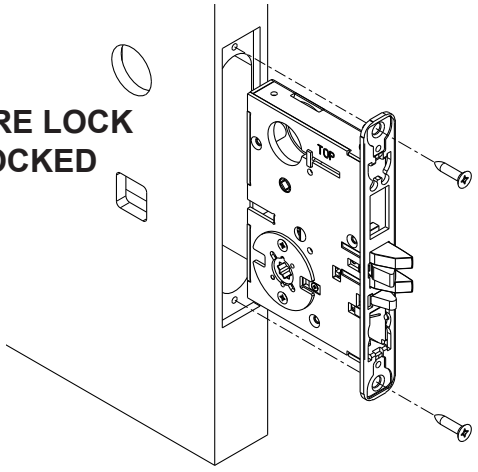

Step 3) Install spacer blocks on both sides of lock-body with 1/4" Fillister Head Screws

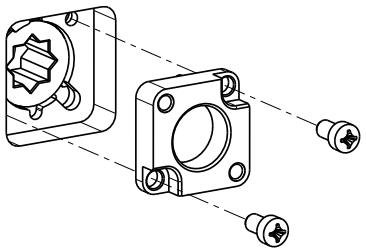

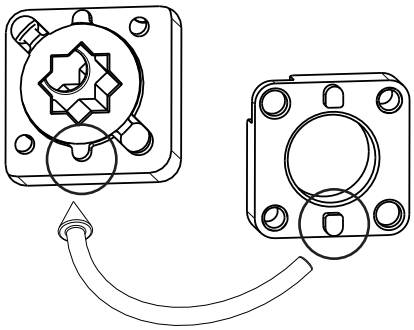

Note:
Align tabs on spacer with cutouts on lock-body

Step 4) Install adapter plates on both sides of door using 1/2" Flat Head Screws

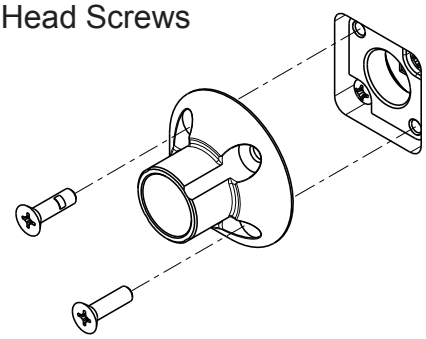

Copyright © 2011 Corbin Russwin, Inc., an ASSA ABLOY Group company. All rights reserved. Reproduction in whole or in part without the express written permission of Corbin Russwin, Inc. is prohibited.

Step 5) Thread collar onto both sides of door using supplied rubber grip

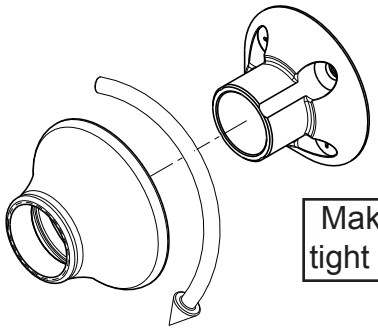

Make sure collar is tight up against door

Step 6) Install O/S Lever

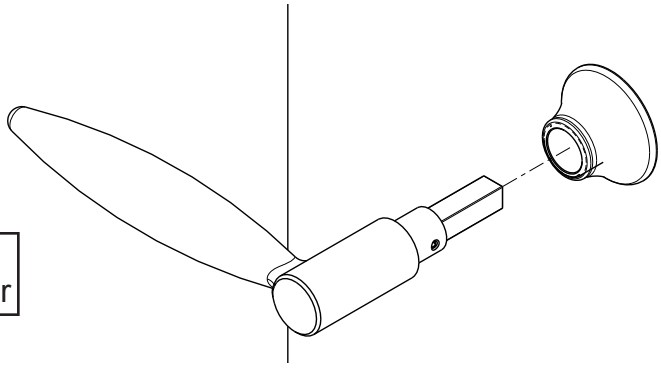

Step 7) Install I/S spindle and adjustment bolt

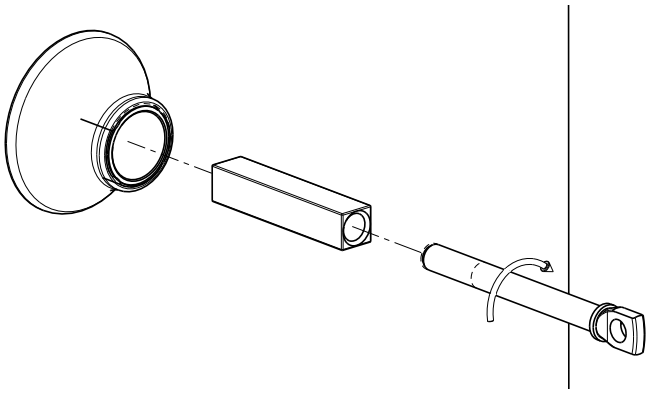

Use Correct Spindle Orientation

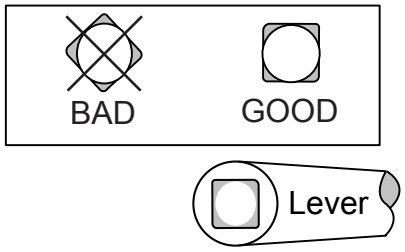

Step 8) Install I/S lever with dowel screw

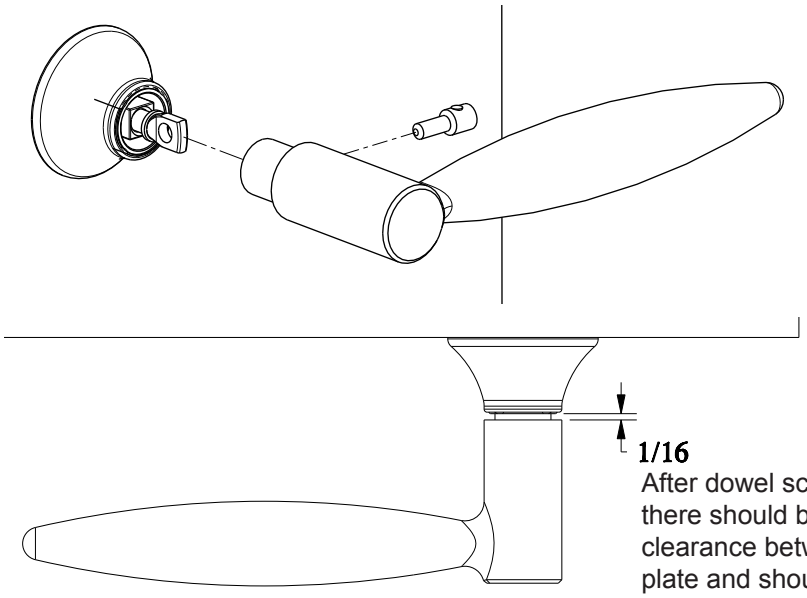

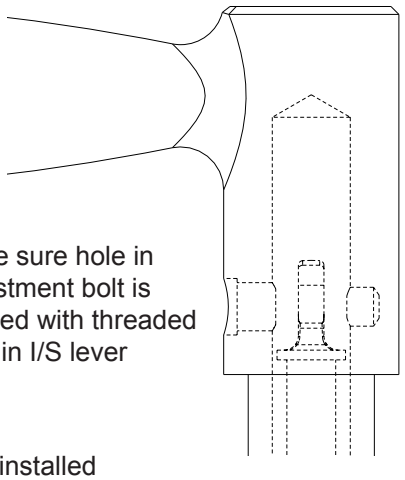

Make sure hole in adjustment bolt is aligned with threaded hole in I/S lever

1/16

After dowel screw is installed there should be less than 1/16" clearance between adapter plate and shoulder on lever

Step 9) Rotate both levers individually and make sure both levers return. If either lever binds, remove I/S lever and un-thread adjustment bolt 1/2 turn.

Copyright © 2011 Corbin Russwin, Inc., an ASSA ABLOY Group company. All rights reserved. Reproduction in whole or in part without the express written permission of Corbin Russwin, Inc. is prohibited.

Step 10) If the lock function calls for a cylinder or turn-piece proceed to cylinder and turn-piece instructions on page 10. Otherwise proceed to next step

Step 11) Install scalp using 3/16” Flat Head Screws

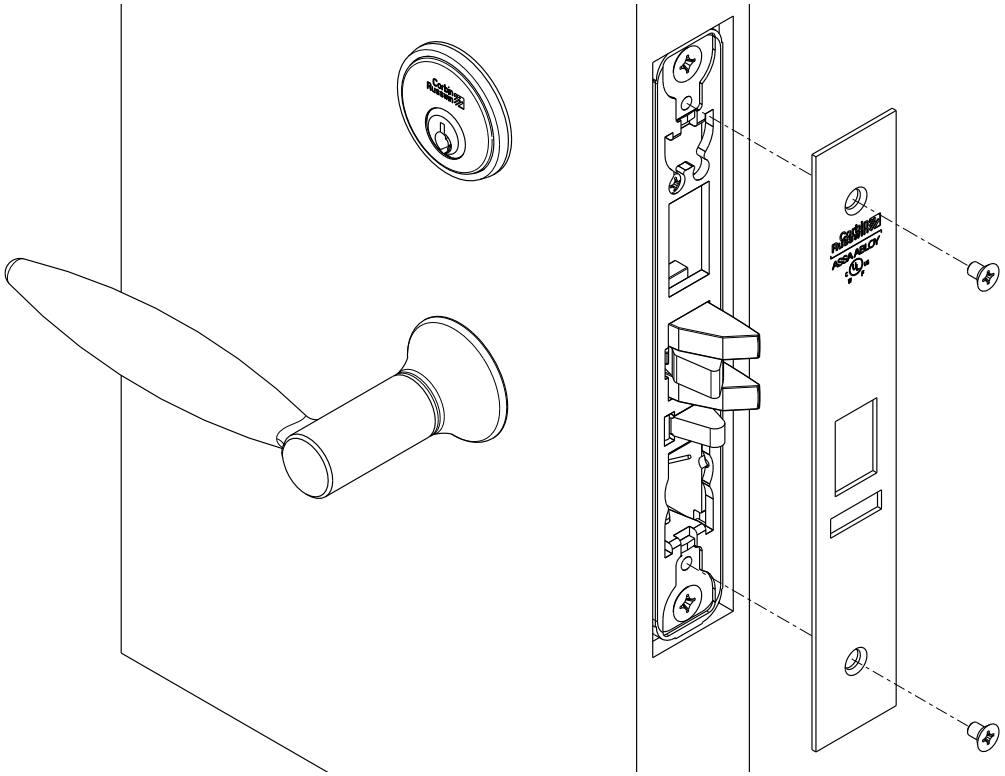

Copyright © 2011 Corbin Russwin, Inc., an ASSA ABLOY Group company. All rights reserved. Reproduction in whole or in part without the express written permission of Corbin Russwin, Inc. is prohibited.

HALF TRIM (M30) INSTALLATION

Step 1) Install strike with shorter (3/4”) mounting screws

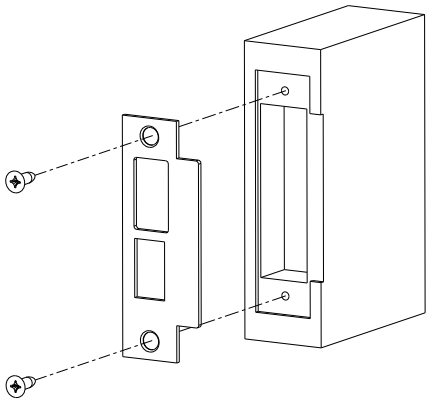

Step 2) Insert mortise lock into door and hand tighten longer (1”) mounting screws

MAKE SURE LOCK IS UNLOCKED

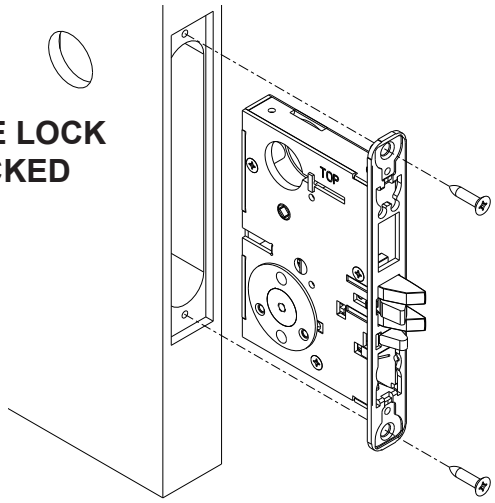

Step 3) Install spacer block on trim side of lock-body with 1/4” Fillister Head Screws

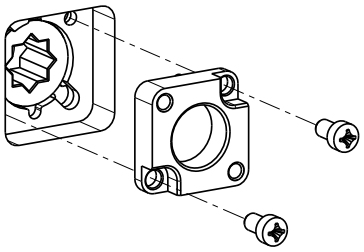

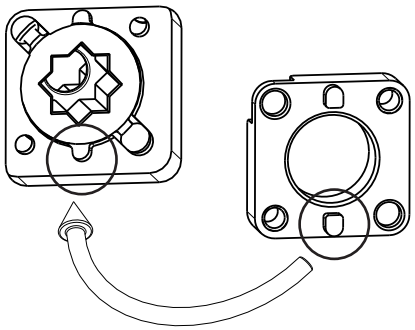

Note:
Align tabs on spacer with cutouts on lock-body

Step 4) Install adapter plate on trim side of door using 1/2” Flat Head Screws

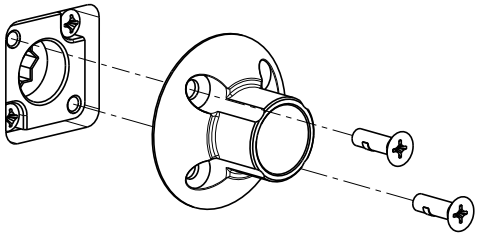

Step 5) Thread collar on trim side of door using supplied rubber grip

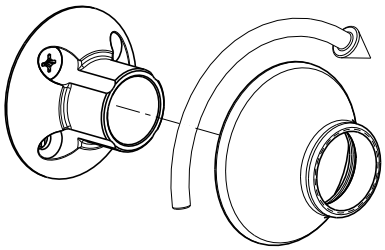

Make sure collar is tight up against door

Copyright © 2011 Corbin Russwin, Inc., an ASSA ABLOY Group company. All rights reserved. Reproduction in whole or in part without the express written permission of Corbin Russwin, Inc. is prohibited.

Step 6) Install I/S spindle and adjustment bolt

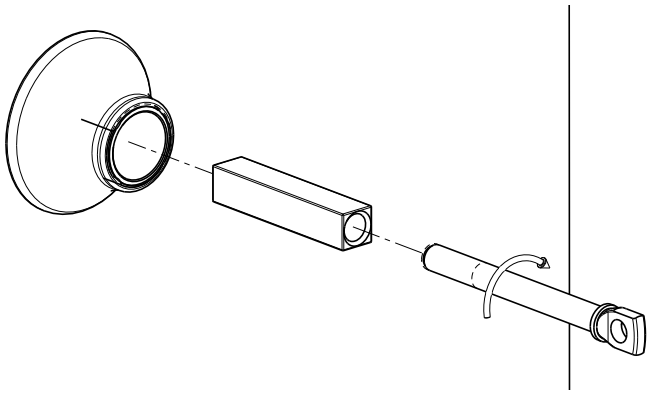

Use Correct Spindle Orientation

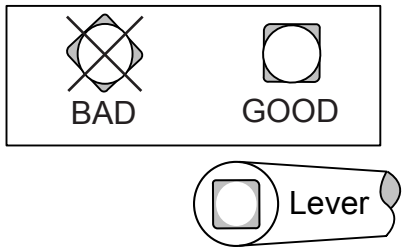

Step 7) Install I/S lever with dowel screw

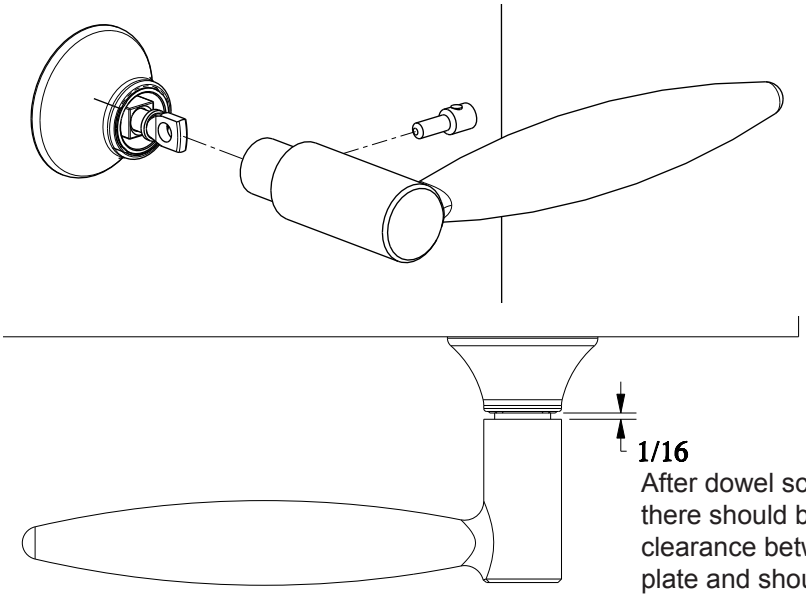

After dowel screw is installed there should be less than 1/16" clearance between adapter plate and shoulder on lever

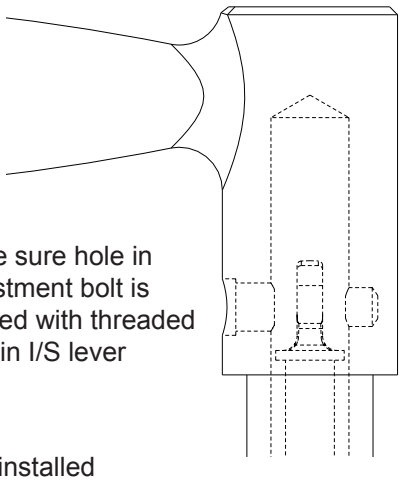

Make sure hole in adjustment bolt is aligned with threaded hole in I/S lever

Step 8) Rotate both levers individually and make sure both levers return. If either lever binds, remove I/S lever and un-thread adjustment bolt 1/2 turn.

Step 10) If the lock function calls for a cylinder or turn-piece proceed to cylinder and turn-piece instructions on page 10. Otherwise proceed to next step

Step 11) Install scalp using 3/16" Flat Head Screws

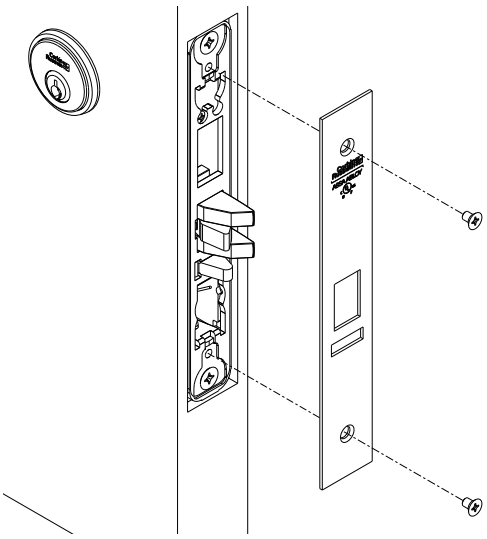

Copyright © 2011 Corbin Russwin, Inc., an ASSA ABLOY Group company. All rights reserved. Reproduction in whole or in part without the express written permission of Corbin Russwin, Inc. is prohibited.

FULL DUMMY TRIM (ML2070) INSTALLATION

Step 1) Insert dummy spindle into both adapter plates

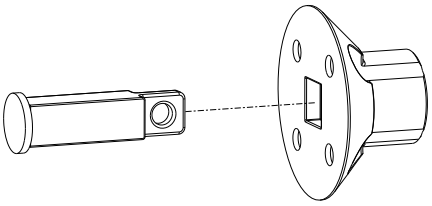

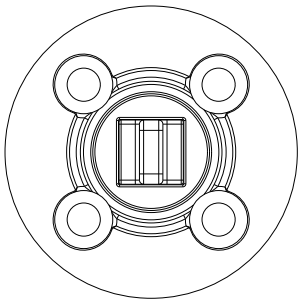

Make sure dummy spindle is aligned as shown

Step 2) Install adapter plate assemblies

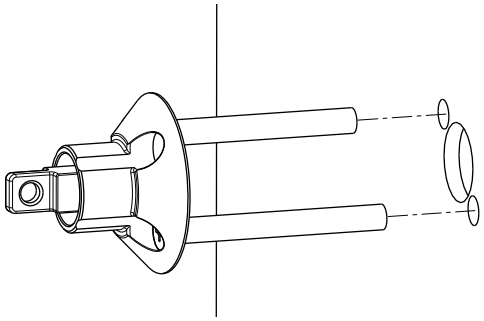

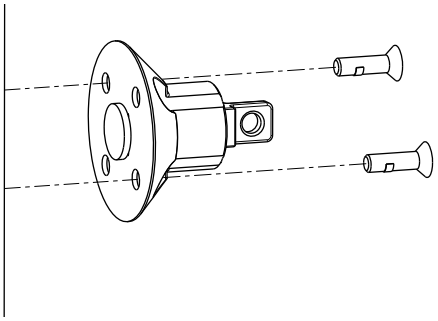

Step 3) Thread collar on both sides of door

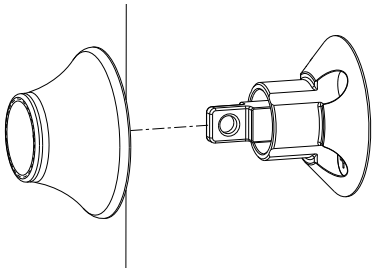

Make sure collar is tight up against door

Step 4) Install lever on both sides of door with dowel screws

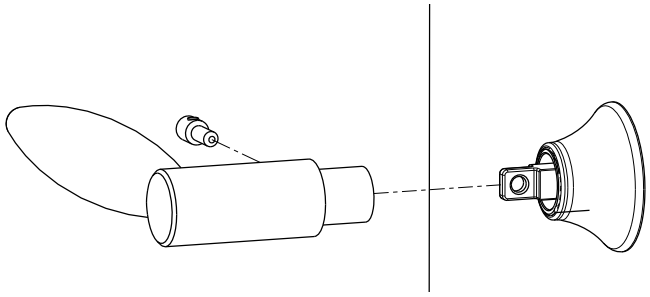

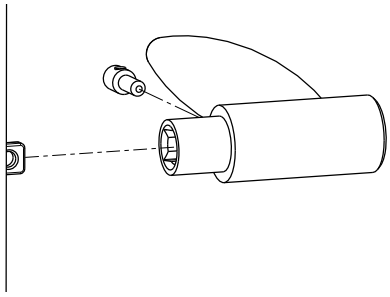

Copyright © 2011 Corbin Russwin, Inc., an ASSA ABLOY Group company. All rights reserved. Reproduction in whole or in part without the express written permission of Corbin Russwin, Inc. is prohibited.

HALF DUMMY TRIM (ML2050) INSTALLATION

Step 1) Insert dummy spindle into adapter plate

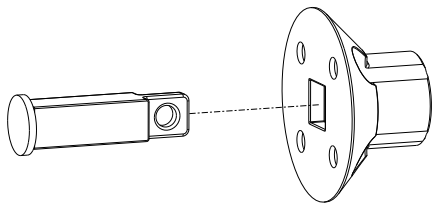

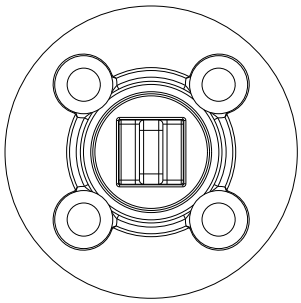

Make sure dummy spindle is aligned as shown

Step 2) Install adapter plate assemblies

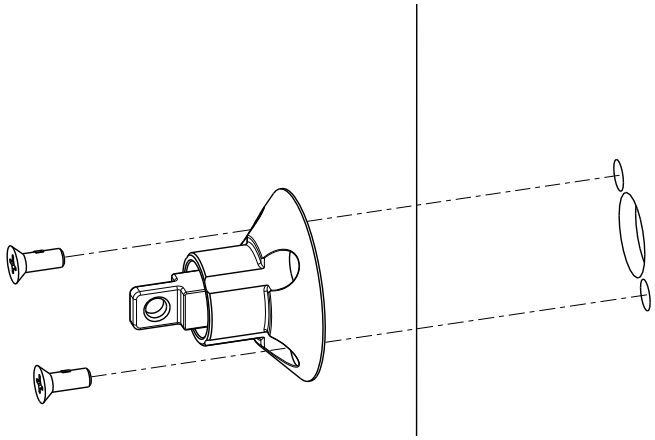

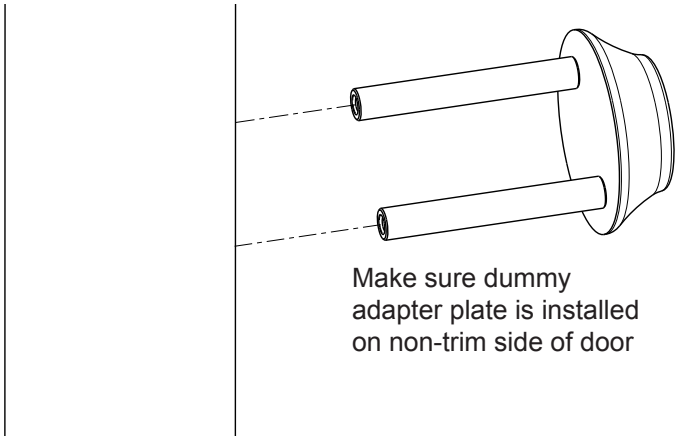

Make sure dummy adapter plate is installed on non-trim side of door

Step 3) Thread collar on trim side of door

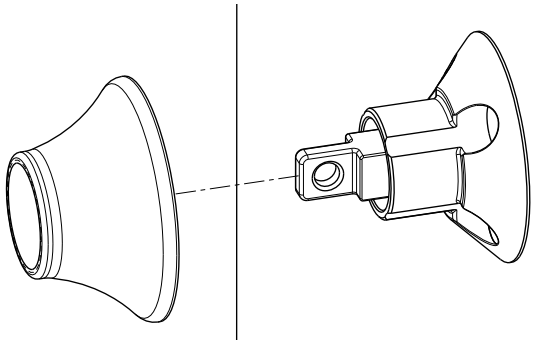

Make sure collar is tight up against door

Step 4) Install lever on trim side of door with dowel screw

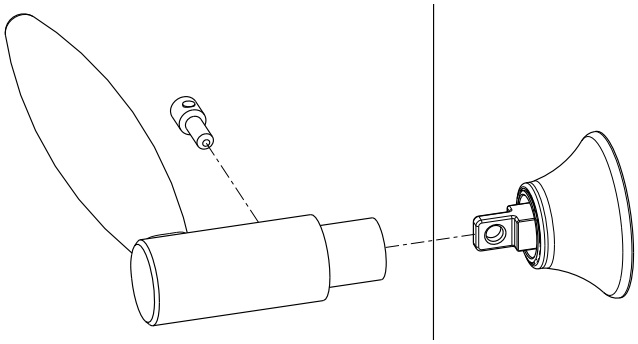

Copyright © 2011 Corbin Russwin, Inc., an ASSA ABLOY Group company. All rights reserved. Reproduction in whole or in part without the express written permission of Corbin Russwin, Inc. is prohibited.

CYLINDER AND TURN-PIECE INSTALL

Cylinder Install:
- Push cylinder collar over cylinder then thread cylinder into lock-body
- Secure cylinder with set screw

NOTE: Key and cylinder must be rotated as shown



Correct Incorrect

Note:
- Slightly retract key to help thread cylinder into lock-body
- If cylinder will not thread into lock loosen lock mounting screws

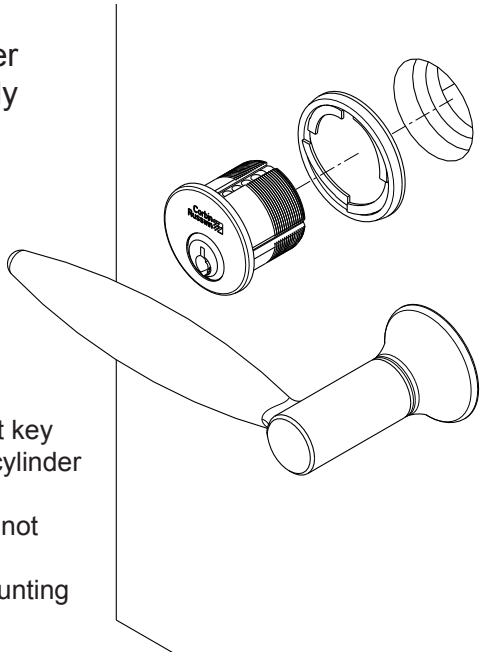

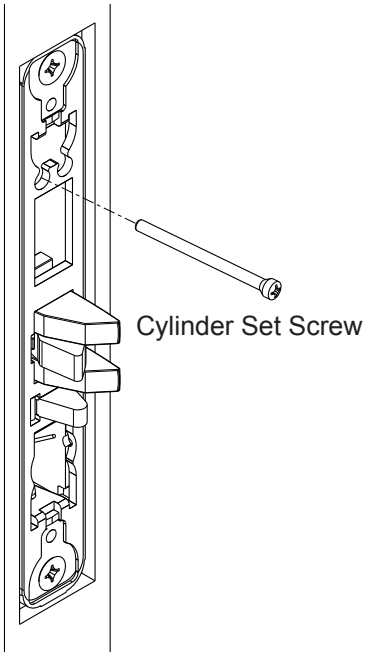

Turn-Piece Install:
- Mark turn-piece mounting holes then drill two .110” holes where marked
- Make sure turn-piece is vertical when lock is unlocked

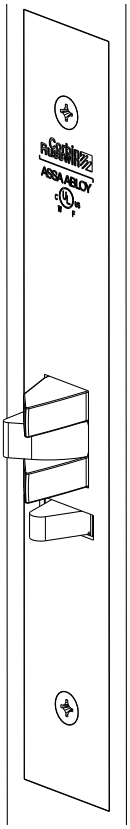

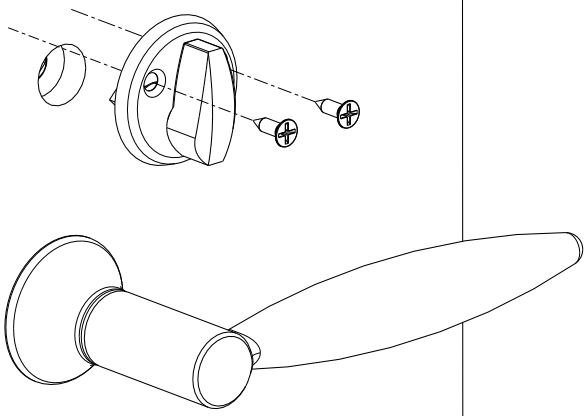

Copyright © 2011 Corbin Russwin, Inc., an ASSA ABLOY Group company. All rights reserved. Reproduction in whole or in part without the express written permission of Corbin Russwin, Inc. is prohibited.